OCM
东方链条工业株式会社
ORIENTAL CHAIN MFG.CO., LTD.

OCM 产品综合样本
OCM PRODUCTS GENERAL CATALOG

东方链条工业株式会社
ORIENTAL CHAIN MFG.CO., LTD.

OCM链条广泛应用于各种设备。公司于1947年成立，从事链条制造。自此OCM一直致力于滚子链、输送链条和链轮的生产。丰富的经验和不断的研发使OCM可以满足客户要求。

58年来，OCM努力解决了许多工业难题。OCM S10型—世界最小的链条以及由OCM最早生产的OSB系列，展示了OCM的能力。

OCM的贡献是向全球提供可帮助解决工业难题的产品。

OCM chains are used in various equipment. The company was founded in 1947 to manufacture chains. Since then OCM has been engaged in the manufacture of roller chains, conveyors and sprockets. OCM is, therefore, in a position to meet customer's requirements with broad experience and endless research.

For over 58 years OCM's effort has been to solve the problems of industry. OCM S10 the world's smallest chain and OSB Series OCM has first manufactured
indicate its ability.

OCM's dedication is to provide products that help solve the problems of industry in the world.

ISO 9001
Cert JQA 1248

CERTIFIED JQA MANAGEMENT SYSTEM QUALITY SYSTEM
日本质量保证机构
JAPAN QUALITY ASSURANCE ORGANIZATION

CERTIFIED IQNet MANAGEMENT SYSTEM
国际认证网
THE INTERNATIONAL CERTIFICATION NETWORK

索 引 INDEX

滚子链 Roller Chain

自润滑链条 Self Lubricating Chain

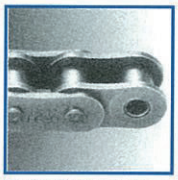

特重载荷链条 Extra Heavy Duty Chain

微型节距链条 Mini Pitch Chain

BS / DIN 滚子链 BS / DIN Roller Chain

耐腐、耐热链条 Corrosion and Heat Resistance Chain

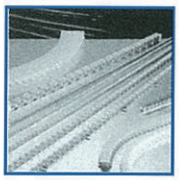

工程树脂链条 Engineering Plastic Chain

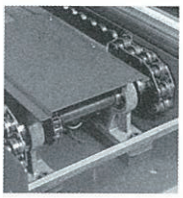
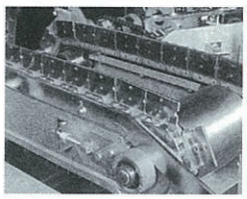
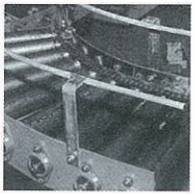
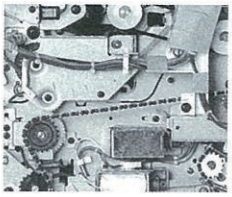
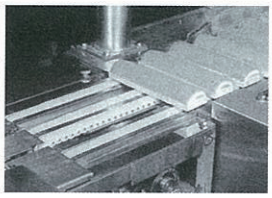
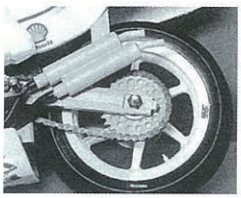
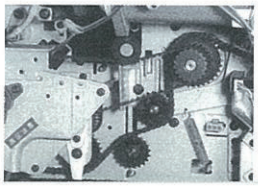
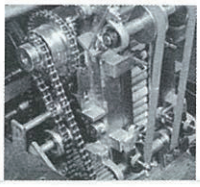
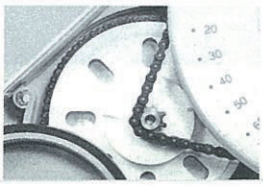

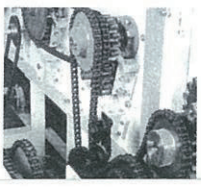
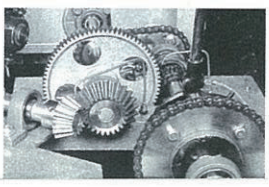

小型输送链条
Small Conveyor Chain

输送链条
Conveyor Chain

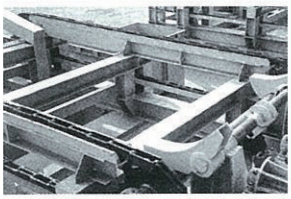
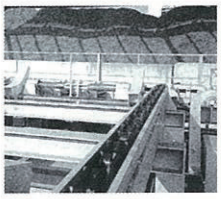

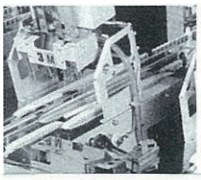
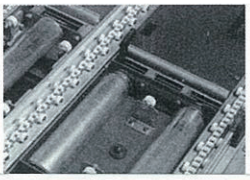
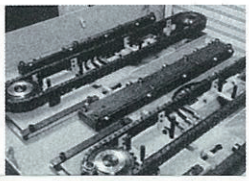

注 意 事 项
WARNING

1. 注意

OCM的所有产品均为精心制作产品。
但选择、拆装或维修不当，将会造成严重事故。请参照OCM产品样本及相关说明。如有疑问，敬请联络。

2. 拆装链条和链轮时应注意事项

在连接或拆卸链条时，

a) 配戴适当的防护镜、手套、安全鞋，穿防护服；
b) 使用时应固定好链条及部件以防其移动；
c) 采用适当可用的工具连接或拆卸链条；
d) 销轴正确方向未经确认不得插入或拔出销轴；
e) 不只是操作者一人，现场的其他人员也应遵守上述指示。

3. 关闭电源开关

在进行链条的安装、拆卸或诸如上油等维修服务时，要关闭电源开关以防事故的发生。

4. 防止意外事故的发生

清理干净作业现场，以防意外事故的发生。

5. 更换链条部件属危险作业

更换磨损链或链轮时，切勿使用拆卸的链条部件重新装配链条。应采用新部件进行更换。

6. 再处理链条属危险作业

切勿再处理链条。链条的所有部件为淬火处理。

1) 对热处理部件进行镀层或表面处理会损坏链条。
2) 切勿对热处理链条、链轮及其部件施焊，否则会造成裂纹并因热影响降低其强度。
3) 切勿对热处理后的链条、链轮及其部件再进行退火处理。

7. 拆除阻碍链条和链轮的物品

阻碍传动链和链轮的物品不仅危险，还会缩短使用寿命。应经常检查和拆除阻碍物。

1. Attention

All the OCM products are carefully manufactured. However, improper selection, handling or maintenance may result in a serious accident. Please refer to OCM product catalogs and related instructions. If you have any questions, please contact us.

2. Warning for handling chains and sprockets

When connecting or disconnecting chain,

a) Wear safety glasses, gloves, safety shoes and protective clothing suitable for the job.
b) Support the chain to prevent the uncontrolled movment of chain and parts.
c) Use proper tools in good condition suitable for connecting and disconnecting chain.
d) Don't insert or remove pins without knowing their correct direction.
e) Not only a person being at work but also a person nearby should follow the above instructions.

3. Lock out power switch

When installing, dismounting or maintenance servicing like lubricating chain, always lock out power switch to avoid an accident.

4. Prevent secondary accident

Always clear around the working area in order to prevent secondary accident.

5. To replace parts of chain is dangerous

When replacing worn chain or sprocket, do not attempt to rebuild chains by using parts of disassembled chains. Replace all of them with new ones.

6. Reprocessing chain is dangerous

Do not try to reprocess chain. Almost all parts of chain are hardened by heat treatment.

1) Plating or some surface treatment of heat treated parts may result in the destruction of chain.
2) Do not weld heat treated chain, sprockets and their parts. It may lead to crack them and decrease their strength by heat influence.
3) Do not anneal heat treated chain, sprockets and their parts.

7. Remove any object interfering with chain and sprocket

Any object interfering with driving chain and sprocket is not only dangerous but make their life span short. Always check and remove the interfering object.

8. 润滑

不断润滑会延长链条寿命。如果长时间未润滑需要上油的链条，链条的寿命将比预期使用寿命缩短。

9. 清洗

清洗链条时不要使用酸、碱、汽油和易挥发溶剂。将其浸入煤油中清洗，然后将其润滑好。

10. 调整轴和链轮中心线

为使链条运行正常，链轮必须保持在一条直线上，水平安装、调整轴。

11. 制作安装链条

1) 参照上述1至10项。
2) 连接链节
   A. 连接链板
   a) 松配合型：此类型易于连接链板装入销轴上。
   b) 半压紧型：用锤子将连接链板敲入销轴上。
   B. 卡簧片
      a) 按照正确的方向插入。
   C. 开口销
   a) 不要使用市场上销售的开口销。只能使用提供的开口销。
   b) 按照下图所示进行安装。

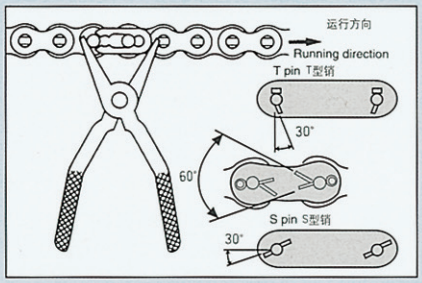

3) 不要为安装方便而改变链节孔和销轴的直径。
4) 不要使用用过的部件，如卡簧片、开口销、连接链节等。
5) 运行前检查事项
   A. 连接链节连接好。
   B. 链条与链轮齿咬合。
   C. 设备周围无阻碍物和散乱物。
   D. 安全罩安装好。
   E. 链条或安全罩周围无阻碍物。
   F. 连接链节无异常情况。
   G. 无异常噪音。

12. 链条及链轮使用寿命

因作业环境、条件、链轮齿、润滑状况等不同，即使链条的类型和规格相同，链条的使用寿命不同。如果新链条上安装带磨损轮齿的旧链轮，或将新链轮安装到已伸长的旧链条上，将缩短新链条和新链轮的使用寿命。

8. Lubrication

Constant lubrication prolongs the life of almost all chain. If the chain that need lubrication has been kept long time unlubricated, the life of chain is shorter than expected.

9. Washing

When washing chain, don't use any acid, alkali, gasoline and high vaporized solvent. Dip it into kerosine and after that, lubricate it well.

10. Aligning shaft and sprockets

To operate the chain normally, sprockets must make a straight line and shafts must be installed and aligned horizontally.

11. Build and install chain

1) Refer to the item above #1 to 10.
2) Connecting link
   A. Connecting plate
      a) Loose fit type : It is easy to set the connecting plate into pins.
      b) Semi-press fit type : Drive connecting plate into pins by hammer.
   B. Spring clip
      a) Insert well in right direction.
   C. Cottered pin
      a) Do not use the cotter pins on the market. Use only the supplied cotters.
      b) Install as shown below.
3) Do not alter link hole and pin diameter to make them easier fit into chain.
4) Do not use any used parts, such as spring clip, cotter pin, connecting plate and so on.
5) Check before driving
   A. Connecting link is connected well and properly.
   B. Chain engages with teeth of sprockets.
   C. There is no object interfering and scattering around device.
   D. Safety cover has been installed .
   E. There is no object interfering with the chain or the safety cover.
   F. There is nothing unusual on the connecting link.
   G. There is no unusual noise.

12. Life span of chain and sprocket

Due to the difference of operating environment, condition, teeth of sprocket, status of lubricating and so on, the life span of chains is different even if the chains are the same type and same size. If new chain is used with old sprocket with worn teeth, or if new sprocket is used with old chain that has already been elongated, the life of chain and sprocket gets shorter.

OCM 滚子链
OCM ROLLER CHAIN

滚子链规格
ROLLER CHAIN DIMENSIONS

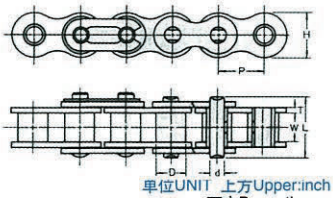

单位UNIT 上方Upper:inch 下方Beneath:mm

ANSI标准滚子链 ANSI standard roller chain

OCM 链号 Chain No.	节距 Pitch P	滚子直径 Roller Diam. D	内节内宽 Width between L.P. W	链板 Link Plate H	链板 Link Plate T	销轴直径 Pin Diam. d	销轴 Pin L	平均抗拉强度 Average Tensile Strength Lb/kgf	最大工作载荷 Max. Working Load Lb/kgf	重量 Weight Lb/ft kg/m
25	0.25 6.350	0.13 3.300	0.126 3.200	0.23 5.850	0.03 0.750	0.091 2.300	0.307 7.800	1058 480	154 70	0.087 0.13
35	0.375 9.525	0.2 5.080	0.189 4.800	0.354 9.000	0.049 1.250	0.141 3.580	0.461 11.700	2601 1180	419 190	0.242 0.36
40	0.5 12.700	0.312 7.920	0.313 7.950	0.472 12.000	0.059 1.500	0.156 3.960	0.634 16.100	4299 1950	860 390	0.443 0.66
41	0.5 12.700	0.306 7.770	0.252 6.400	0.382 9.700	0.049 1.250	0.141 3.580	0.524 13.300	2403 1090	463 210	0.275 0.41
50	0.625 15.875	0.4 10.160	0.376 9.550	0.591 15.000	0.079 2.000	0.2 5.080	0.799 20.300	7165 3250	1389 630	0.726 1.08
60	0.75 19.050	0.469 11.910	0.5 12.700	0.709 18.000	0.094 2.400	0.234 5.950	1 25.400	9921 4500	2094 950	1.075 1.6
80	1 25.400	0.625 15.880	0.626 15.900	0.949 24.100	0.126 3.200	0.313 7.940	1.287 32.700	17637 8000	3638 1650	1.881 2.8
100	1.25 31.750	0.75 19.050	0.754 19.150	1.185 30.100	0.157 4.000	0.375 9.530	1.571 39.900	26455 12000	5512 2500	2.822 4.2
120	1.5 38.100	0.875 22.230	1.006 25.550	1.425 36.200	0.189 4.800	0.437 11.110	1.972 50.100	37038 16800	7275 3300	4.166 6.2
140	1.75 44.450	1 25.400	1.004 25.500	1.661 42.200	0.22 5.600	0.5 12.700	2.134 54.200	48722 22100	9700 4400	5.174 7.7
160	2 50.800	1.125 28.580	1.25 31.750	1.898 48.200	0.252 6.400	0.563 14.290	2.72 69.100	60186 27300	12125 5500	6.652 9.9
180	2.25 57.150	1.406 35.710	1.406 35.700	2.134 54.200	0.283 7.200	0.687 17.460	3.138 79.700	73634 33400	14110 6400	9.044 13.46
200	2.5 63.500	1.562 39.680	1.5 38.100	2.366 60.100	0.315 8.000	0.781 19.840	3.358 85.300	101413 46000	15873 7200	11.087 16.5
240	3 76.200	1.875 47.630	1.89 48.000	2.85 72.400	0.374 9.500	0.937 23.800	4.122 104.700	149914 68000	21826 9900	16.664 24.8

单位UNIT 上方Upper:inch 下方Beneath:mm

微型节距系列 Mini Pitch Series

OCM 链号 Chain No.	节距 Pitch P	滚子直径 Roller Diam. D	内节内宽 Width between L.P. W	链板 Link Plate H	链板 Link Plate T	销轴直径 Pin Diam. d	销轴 Pin L	平均抗拉强度 Average Tensile Strength Lb/kgf	最大工作载荷 Max. Working Load Lb/kgf	重量 Weight Lb/ft kg/m
S10	0.125 3.175	0.067 1.700	0.051 1.300	0.114 2.900	0.016 0.400	0.045 1.150	0.144 3.650	220 100	44 20	0.02 0.03
15	0.188 4.763	0.098 2.480	0.094 2.380	0.173 4.400	0.022 0.570	0.064 1.620	0.224 5.700	485 220	88 40	0.06 0.09
25H	0.25 6.350	0.13 3.300	0.126 3.200	0.23 5.850	0.039 1.000	0.091 2.300	0.35 8.900	1146 520	209 95	0.108 0.16

单位UNIT 上方Upper:inch 下方Beneath:mm

S系列 S Series

OCM 链号 Chain No.	节距 Pitch P	滚子直径 Roller Diam. D	内节内宽 Width between L.P. W	链板 Link Plate H	链板 Link Plate T	销轴直径 Pin Diam. d	销轴 Pin L	平均抗拉强度 Average Tensile Strength Lb/kgf	最大工作载荷 Max. Working Load Lb/kgf	重量 Weight Lb/ft kg/m
42	0.5 12.700	0.306 7.770	0.134 3.400	0.378 9.600	0.039 1.000	0.143 3.630	0.37 9.400	2205 1000	300 136	0.215 0.32
43	0.5 12.700	0.306 7.770	0.189 4.800	0.378 9.600	0.039 1.000	0.143 3.630	0.425 10.800	2205 1000	300 136	0.235 0.35
S43	0.5 12.700	0.306 7.770	0.189 4.800	0.472 12.000	0.059 1.500	0.156 3.960	0.512 13.000	4299 1950	860 390	0.356 0.53
S44	0.5 12.700	0.306 7.770	0.252 6.400	0.472 12.000	0.059 1.500	0.156 3.960	0.575 14.600	4299 1950	860 390	0.39 0.58
S52	0.625 15.875	0.4 10.160	0.252 6.400	0.591 15.000	0.079 2.000	0.2 5.080	0.673 17.100	7165 3250	1389 630	0.638 0.95
S525	0.625 15.875	0.4 10.160	0.311 7.900	0.591 15.000	0.079 2.000	0.2 5.080	0.732 18.600	7165 3250	1389 630	0.672 1.00
S63	0.75 19.050	0.469 11.910	0.376 9.550	0.709 18.000	0.094 2.400	0.234 5.950	0.882 22.400	9921 4500	2094 950	0.941 1.40

OSB 滚子链特征
FEATURES OF OCM ROLLER CHAIN

1. 再冲孔的链节孔

OCM的再冲孔工艺可排除斜孔的发生。孔的两侧平行，销轴与孔间的载荷效果更好。
该工艺可提高疲劳强度。

Re-Punched Link Holes

OCM's repunching process removes the taper of hole. Both sides of the hole are parallel, better bearing between pins and holes.
This process increases fatigue strength.

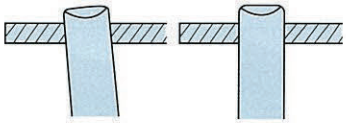

2. 喷丸处理

滚子和链板经喷丸处理，可提高疲劳强度。

Shot-Peening

Rollers and link plates are shot peened to increase fatigue strength.

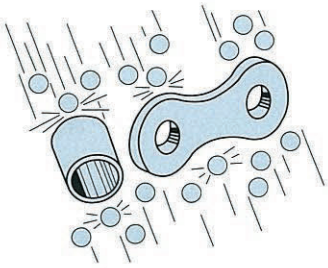

3. 油壶定位+无缝套筒

油孔设置在套筒内侧，避开负载部位，作为油池补充润滑油。该特征可降低链条的磨损，延长其使用寿命。

Oil Port oriented + Solid Bush

These holes, located on the inner side of the bushings away from bearing area, function as a reservoir for extra lubricant. This feature reduces chain wear and extends the chain's operating life.

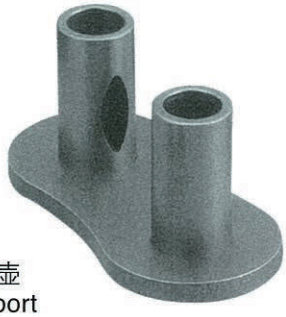

油壶
Oil port

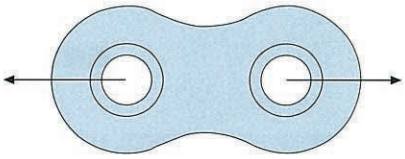

定位
Oriented

4. 高圆筒度的无缝套筒

高圆筒度的无缝套筒的优点是负载面广，利用油壶作油池，可提高链条的耐磨性，降低链条的初定伸长率。

Cylindrical roundness of Solid Bush

The advantage of solid bush , cylindrical roundness, making a large bearing area and oil port as an oil reservoir , improves the chain wear resistance and minimize an initial chain elongation.

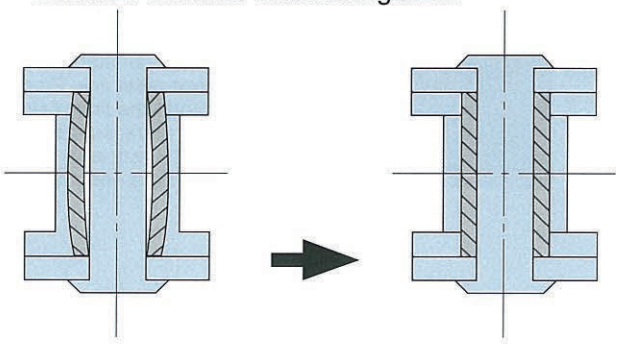

5. 预载荷

OCM滚子链装配后自动预载荷以降低初定伸长率。

Preloading

OCM roller chain is preloaded automatically after assembly to minimize initial elongation.

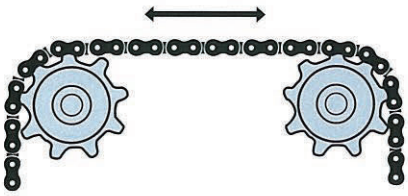

滚子链 ROLLER CHAIN

滚子链的制造

滚子链是由内链节和外链节构成。
内链节由配置两个自由回转滚子的两个套筒压合在内链板组合而成。外链节由两个销轴压合两个外链板组合而成。

销轴有两种型式，铆头环接式和开口销式。

CONSTRUCTION OF ROLLER CHAIN

Roller chain is made up of roller links and pin links. Roller link consists of two bushings press-fitted into roller link plates with two free rotating rollers over the bushings. Pin link consists of two pin link plates into which two pins are press-fitted.

There are two types of pins. Rivet and cotter types.

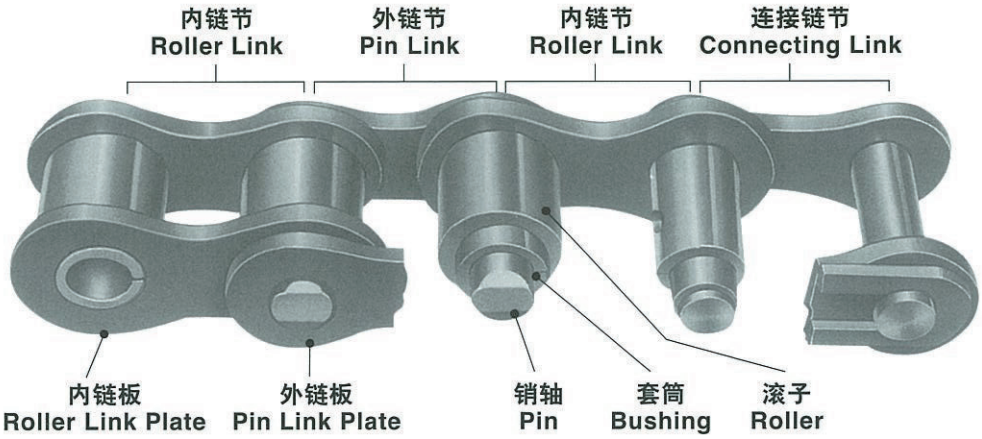

滚子链的连接 ROLLER CHAIN CONNECTION

连接链节 CONNECTING LINKS

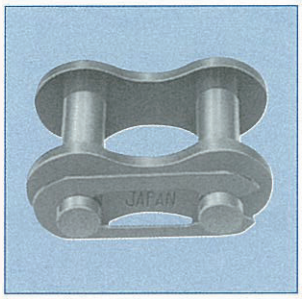

1) 卡簧片式
对于所有单排和多排ANSI标准80及80以下链条、英国标准16B及16B以下链条，卡簧片式为标准型。

Spring clip type
This is standard for all single and multiple strand ANSI standard chain, 80 and below and British standard chain, 16B and below.

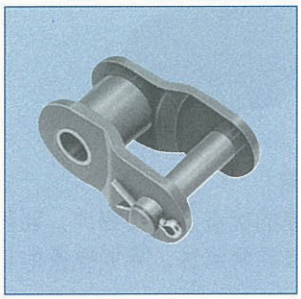

3) 过渡链节
过渡链节是外链节和内链节的组合。该链节用于链条长度中节距数为偶数的链条。建议尽可能不要使用过渡链节。

Offset Link
An offset link is a combination of a roller link and a pin link. This link is used where the chain length is an odd number of pitches. It is recommended not to use an offset link whenever possible.

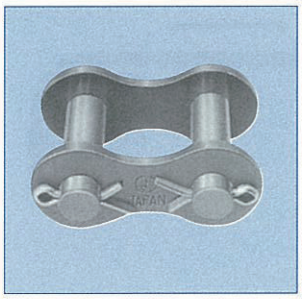

2) 开口销式
对于所有单排和多排ANSI 标准100及100以上链条、英国标准20B及20B以上链条，开口销式为标准型。

Cotter type
This is standard for all single and multiple strand ANSI 100 and above, and British standard 20B and above.

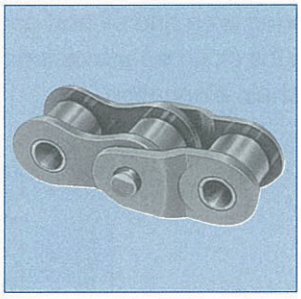

4) 双节距过渡链节
该组件由一个过渡链节和一个内链节构成。销轴压入链板，该组件比单节距过渡链节更适于重击载荷和高速传动作业。

Two Pitch Offset Link
The unit consists of one offset and one roller link. Pins are press fitted into the link plates and the unit is more suitable for heavy impact load and high speed driving than one pitch offset link.

简易链条选择法 EASY CHAIN SELECTION

表一 Table 1

简易选择图表 Easy selection chart

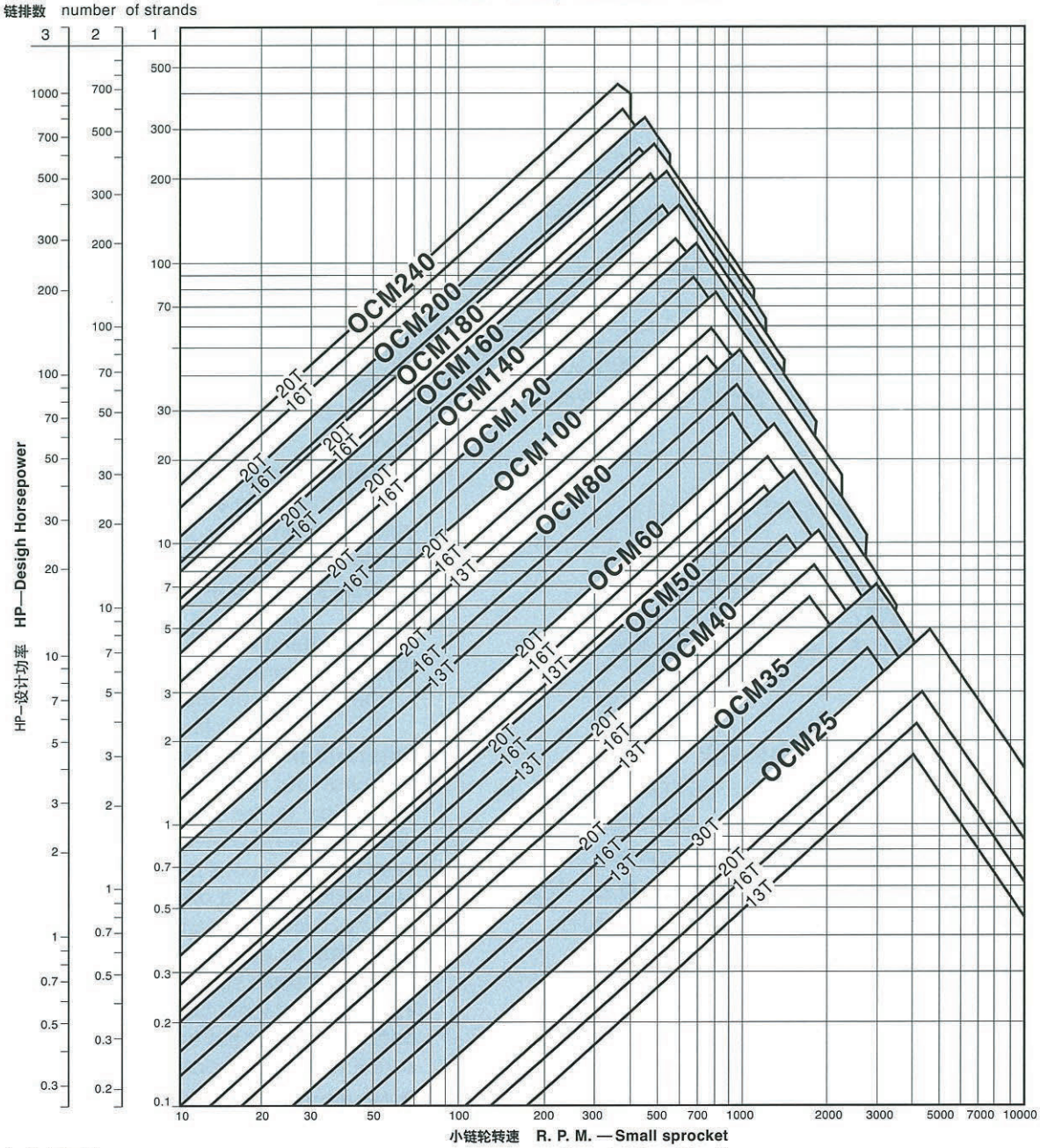

如何使用图表

1. 选择OCM链条时，查找小链轮转速(横线)与设计功率(纵线)的交叉点进行选择。

   实例：

   小链轮转速为200，设计功率为2HP。这时查取的链条为OCM50，小链轮齿数为13T~16T。

   实例：

   小链轮转速为600，设计功率为8HP。这时查取的链条为OCM50和OCM60。OCM50时，齿数为20T。OCM60时，齿数为13T。

   根据图表进行试选后，参照试选链条的额定功率。

2. 当链速低于50M/min.，有时选用第12页所示的低速链效果更好。

How to Use Chart

1. The selection of OCM chain can be made by seeking the intersection of RPM of small sprocket (Horizontal line) and design horsepower (Vertical line).

   Example:

   The rpm of small sprocket is 200, and the design horsepower is 2HP. OCM 50 is obtained and the number of teeth in small sprocket is 13T to 16T.

   Example:

   The RPM of small sprocket is 600 with design horsepower of 8HP. In this case, OCM 50 and OCM 60 are sought. In case of OCM 50, the number of teeth is 20T. In the event of OCM 60, the number of teeth is 13T.

   After having made a tentative selection based on the chart, refer to the horsepower rating of the tentatively selected chain.

2. If the speed of chain is less than 50M/min., it is sometimes better to use a slow speed selection shown on page 12.

传动装置选择程序 DRIVE SELECTION PROCEDURE

传动滚子链的选择程序

一般选择

(1) **选择链条时需要了解以下情况：**

1. 电源
2. 传输功率
3. 从动设备
4. 主动轴和从动轴的每分钟转数及轴直径
5. 轴中心距

(2) **工作系数的确定**

根据输入功率的类型和从动设备的类型从表4中选择工作系数，以补偿施加于链条上的载荷。

(3) **设定设计功率**

用传输功率乘以(2)项中查得的系数

单排链：

(A) 设计功率= 传输功率×工作系数

多排链：

(B) 设计功率= $\frac{\text{传输功率×工作系数}}{\text{多排链系数}}$

(4) **小链轮齿数和滚子链的确定**

根据高速轴的转数和设计功率(如果转速低，则是传动轴。如果超速传动，则是从动轴)，参照表1《简易选择图表》和额定功率选择合适的链条和小链轮齿数。确定小链轮齿数后，检查选定链轮的孔径，确定该链轮与主动轴配合。

(5) **大链轮齿数的确定**

用传动比乘以小链轮齿数。

选择实例 (1)

Q1. 用一台1800rpm的电机驱动一台3马力的离心压缩机，如何选择链条和链轮。

A1. 从表4中查工作系数为1.3。

传输功率×工作系数=设计功率

3HP×1.3 = 3.9HP

2. 参照表1《简易选择图表》查1800rpm, 3.9HP，可查取链条OCM 35, 链轮为16T~20T。

Procedure for selecting roller chain for transmission

GENERAL SELECTION

(1) The following information is required for chain selection:

1. Source of power
2. Power to be transmitted
3. Driven Equipment
4. Revolution of drive and driven shaft per minute, and the diameter of the shaft
5. Center distance of the shafts

(2) Determination of service factor

Select a service factor from Table 4 to compensate for the loads imposed on the chain by the type of input power and the type of equipment to be driven.

(3) Establish design horsepower

Multiply the power to be transmitted by the factor obtained from (2)

Single strand:

(A) Design horsepower = The power to be transmitted × service factor

Multiple strand:

(B) Design horsepower = $\frac{\text{The power to be transmitted × service factor}}{\text{Multiple strand factor}}$

(4) Determination of number of teeth in small sprocket and roller chain

According to the number of revolutions and designing horsepower of a high speed shaft(in case of low speed, it is a drive shaft. In the event of overdrive, it is a driven shaft), refer to Table 1 Easy Selection Chart and horse power ratings and select an appropriate chain and the number of teeth of small sprocket. When you determine the number of teeth for small sprocket, check the bore capacity of the sprocket selected, making sure it will accommodate the driving shaft.

(5) Determination of number of teeth in the large sprocket

Multiply the drive ratio by the number of teeth in small sprocket.

Selection Example (1)

Q1. A centrifugal compressor with 3HP is driven by an1800 rpm electric motor. How to select chain and sprockets.

A1. Seek the service factor, 1.3, from Table 4.

Power to be transmitted × Service factor = Design Horsepower

3HP × 1.3 = 3.9HP

2. Refer to Table 1. Easy selection chart for 1800rpm 3.9 HP, and OCM 35 Chain with sprocket 16T to 20T is obtained.

3. 查链号35的额定功率。链轮35 17T、转速1800rpm的链条的额定功率为3.93HP，可满足要求。

4. 选择下列内容：链号35，小链轮35 17T。

选择实例 (2)

Q1. 传动装置的转速为500rpm，传输功率为10HP。转速rpm降至125(1/4)。中心距应为270mm，限定间距为480 mm，载荷平稳。这种情况如何选择链条和链轮。

A1. 设计功率按如下方式计算：
设计功率：10HP×1.0 = 10HP

2. 根据表1《简易选择图表》和额定功率选择链条和链轮齿数。
选定OCM 60 18T。

3. 减速比为0.25 = $\frac{125rpm}{500rpm}$

为此，大链轮齿数为72T= $\frac{18T}{0.25}$

4. 18T外径为119 mm，72T外径为447mm。
该布置的要求间距为

$\frac{119+447}{2}$ + 270 = 553mm，该值不能含在480mm内。

5. 选择多排链。
根据表1《简易选择图表》选择OCM 50-2, 16T~20T。利用该公式(B)计算得出设计功率：

$\frac{10HP \times 1.0}{1.7}$ = 5.88HP

(1.7是多排链系数)
参照额定功率。查取OCM 50-2, 18T。其外径为99mm。大链轮为72T= $\frac{18T}{0.25}$ 外径373mm。

但该选择不在此间距的选择范围内。

6. 三排链的选择采用与上述相同的方法。查取OCM 50-3，13T and 52T。 链轮外径分别为73mm和271mm。

$\frac{73+271}{2}$ + 270 = 442mm，该值含在要求的间距内。

选择的链条和链轮为OCM 50-3，13T and 52T。

3. Check horsepower ratings for chain 35, and as you see, the horsepower ratings of 35 17T with speed of 1800rpm is 3.93 HP, which is satisfactory.

4. The following are selected: Chain No 35
Small Sprocket 35 17T

Selection Example (2)

Q1. The number of revolutions for drive is 500rpm and the power to be transmitted is 10HR. The rpm is reduced to 125 (1/4). The center distance should be 270mm with a space limitation of 480mm, and a uniform load. How to select chain and sprocket for this application.

A1. Design horsepower is computed as follows:
Design horsepower: 10HP×1.0=10HP

2. Select chain and the number of teeth for sprocket by referring to Table 1, Easy selection Chart and horsepower ratings.
OCM 60 18T has been selected.

3. Speed reduction ratio is 0.25 = $\frac{125rpm}{500rpm}$
Therefore, the number of teeth in the large sprocket is 72T= $\frac{18T}{0.25}$

4. The outside diameter of the 18T is 119mm and the 72T is 447mm.
The space required for these arrangements is
$\frac{119+447}{2}$ + 270 = 553mm which can not be contained in the 480mm.

5. Multiple strand chain is selected.
OCM 50-2 16T to 20T is selected using Table 1, Easy Selection Chart. The design horsepower is obtained from the formula (B)

$\frac{10HP \times 1.0}{1.7}$ = 5.88HP

(1.7 is multiple strand factor)
Refer to horsepower ratings. OCM 50 - 2, 18T is obtained. Its outside diameter is 99mm. The large sprocket is 72T = $\frac{18T}{0.25}$ outside diameter 373mm. However, this selection can not be contained in the space.

6. Triple strand chain is selected in the same manner as above. OCM 50-3, 13T and 52T are obtained. The outside diameter of sprockets is 73mm, and 271 mm respectively.

$\frac{73+271}{2}$ + 270 = 442mm can be contained in the space required.

The chain and sprockets selected are OCM 50-3, 13T and 52T.

特殊应用选择 SELECTION ON SPECIAL APPLICATIONS

如果运行条件要求滚子链速低于50m/min.，要考虑的不是磨损伸长率，而是疲劳强度。与一般选择方法相比，低速链条为经济的选择。特殊运行条件下，其选择方法要不同于一般选择方法。

(1) 低速运行

当链速低于50M/min.，且起动、停止频率较低时，使用下列公式。

容许载荷 ≧ 作用于链条的最大载荷 × 工作系数 × 速度系数

选择步骤如下：

1. 根据表1《简易选择图表》中的发动机功率HP和转速RPM选择较小滚子链和链轮。
2. 用查取的链轮转速rpm乘以表2单位链轮转速rpm的链速值计算得出链速m/min.。
3. 确定作用于链条上的最大载荷。
4. 查表4中的工作系数。
5. 从表3速度系数中查速度系数。
6. 利用上述公式计算查取值，比较根据上述第1项试选的滚子链的容许载荷。
   如果不能满足要求，应更换链条和链轮，再检查。

注：

当运行条件需要设备频繁起动、停止、反向转动时，提高工作系数以补偿运行条件，或咨询OCM。

(2) 异常环境条件下的运行

当运行环境条件低于正常情况时，咨询OCM。如果运行环境温度或腐蚀性高时，建议使用不锈钢滚子链。

表3速度系数 Table 3 Speed Factor

滚子链速 Speed of Roller Chain(m/min)	速度系数 Speed Factor	备注 Remarks
低于10 Less than 10	1.0	
10及小于20 10 and Less than 20	1.1	
20及小于30 20 and Less than 30	1.2	
30及小于40 30 and Less than 40	1.3	
40及小于50 40 and Less than 50	1.4	
50及小于70 50 and Less than 70	1.6	只适用于OCM不锈钢滚子链 Applicable only to OCM Stainless Roller Chain

If an application requires the speed of roller chain at less than 50m/min., it is necessary to take into account not wear elongation but fatigue strength. It is, therefore, economical to use a low speed selection method rather than the general selection procedure. For operations under special conditions, a different selection method is required from the general selection procedure.

(1) Operation at low speeds

The formula below is used if the speed of chain is less than 50M/min. with infrequent starts and stops.

Allowable load ≧ Max load imposed on chain × Service factor × Speed factor

Selection procedure is as follows:

1. Select slightly smaller roller chain and sprocket from a prime mover HP and RPM on Table 1 Easy Selection Chart.
2. Multiply the rpm of sprocket obtained by Table 2, the value of chain speed per one rpm of the sprocket to obtain the speed of chain, m/min.
3. To determine the max load imposed on chain.
4. Service factor from Table 4.
5. Speed factor is obtained from Table 3, speed factor.
6. Using the formula above, calculate the value obtained, and compare the allowable load of a roller chain tentatively selected on the item I above.
   If not satisfactory to meet the requirements, please change the chain and sprocket and review.

Note:

When operation conditions are frequent starts and stops and reversals of drive rotation, increase the service factors to compensate for the conditions or consult OCM.

(2) Operations under abnormal atmosphere conditions

If the atmosphere condition of operation is worse than ordinary, consult OCM. If operation atmosphere is high temperature or corrossive, it is recommended to use stainless steel roller chain.

表2. 单位链轮转速的链速
Table 2 Chain Speed per one rpm of sprocket

OCM 链号 Chain No.	链轮齿数 Number of teeth in sprocket																				
	10	11	12	13	14	15	16	17	18	19	20	21	22	23	24	25	26	27	28	29	30
OCMS10	0.032	0.035	0.038	0.041	0.044	0.048	0.051	0.054	0.057	0.060	0.064	0.067	0.070	0.073	0.076	0.079	0.083	0.086	0.089	0.092	0.095
OCM 15	0.048	0.052	0.057	0.062	0.067	0.071	0.076	0.081	0.086	0.090	0.095	0.100	0.105	0.110	0.114	0.119	0.124	0.129	0.133	0.138	0.143
OCM 25	0.064	0.070	0.076	0.083	0.089	0.095	0.102	0.108	0.114	0.121	0.127	0.133	0.140	0.146	0.152	0.159	0.165	0.171	0.178	0.184	0.191
OCM 35	0.095	0.105	0.114	0.124	0.133	0.143	0.152	0.162	0.171	0.181	0.191	0.200	0.210	0.219	0.229	0.238	0.248	0.257	0.267	0.276	0.286
OCM 40	0.127	0.140	0.152	0.165	0.178	0.191	0.203	0.216	0.229	0.241	0.254	0.267	0.279	0.292	0.305	0.318	0.330	0.343	0.356	0.368	0.381
OCM 50	0.159	0.175	0.191	0.206	0.222	0.238	0.254	0.270	0.286	0.302	0.318	0.333	0.349	0.365	0.381	0.397	0.413	0.429	0.445	0.460	0.476
OCM 60	0.191	0.210	0.229	0.248	0.267	0.286	0.305	0.324	0.343	0.362	0.381	0.400	0.419	0.438	0.457	0.476	0.495	0.514	0.533	0.552	0.572
OCM 80	0.254	0.279	0.305	0.330	0.356	0.381	0.406	0.432	0.457	0.483	0.508	0.533	0.559	0.584	0.610	0.635	0.660	0.686	0.711	0.737	0.762
OCM100	0.318	0.349	0.381	0.413	0.445	0.476	0.508	0.540	0.572	0.603	0.635	0.667	0.669	0.730	0.762	0.794	0.826	0.857	0.889	0.921	0.953
OCM120	0.381	0.419	0.457	0.495	0.533	0.572	0.610	0.648	0.686	0.724	0.762	0.800	0.838	0.876	0.914	0.953	0.991	1.029	1.067	1.105	1.143
OCM140	0.445	0.489	0.533	0.578	0.622	0.667	0.711	0.756	0.800	0.845	0.889	0.933	0.978	1.022	1.067	1.111	1.156	1.200	1.245	1.289	1.334
OCM160	0.508	0.559	0.610	0.660	0.711	0.762	0.813	0.864	0.914	0.965	1.016	1.067	1.118	1.168	1.219	1.270	1.321	1.372	1.422	1.473	1.524
OCM200	0.635	0.699	0.762	0.826	0.889	0.953	1.016	1.080	1.143	1.207	1.270	1.334	1.397	1.461	1.524	1.588	1.651	1.715	1.778	1.842	1.905
OCM240	0.762	0.838	0.914	0.991	1.067	1.143	1.219	1.295	1.372	1.448	1.524	1.600	1.676	1.753	1.829	1.905	1.981	2.057	2.134	2.210	2.286

额定功率表 HORSEPOWER RATINGS TABLE

本样本的额定功率表依据下列条件制定：

(1) 正常环境条件下。
(2) 单排链功率传输。
(3) 工作系数为表4中的1.0。
(4) 润滑良好。
(5) 两轴水平方向传输功率，放置、安装合理。
(6) 载荷变化小。

利用功率输出型式和从动设备型式以补偿作用于链条上的载荷，需要选择适当的工作系数。

对于多排链，采用表5的多排链系数。

表4工作系数 Table 4 Service Factor

工作系数依据 Basis for service factor	从动设备 Driven equipment	工作系数 Service Factor		
		电机或涡轮机 Electric motor or turbine	液压传动内燃机 Internal combustion Engine with hydraulic drive	无液压传动内燃机 Internal combustion Engine without hydraulic drive
载荷平稳 Uniform load	搅拌器，储液离心鼓风机，发生器，离心泵，载荷平稳的输送机或升降机，载荷平稳且无反转的机械设备 Agitators, liquid stock centrifugal blowers, generators,centrifugal pumps,conveyor or elevator uniformly loaded, machinery uniform load and non-reversing.	1.0	1.0	1.2
中等(中度)冲击载荷 Mild (Moderate) shock load	离心压缩机，窑，干燥机，带中度撞击载荷的输送机和升降机，有适度振动的机械设备 Centrifugal compressor, kilns and dryers, conveyor and elevator with mild shock load, machinery with moderate pulsating.	1.3	1.2	1.4
较大冲击载荷 Heavy shock load	往复式压缩机，破碎机，往复式进给机，有重载或反转的机械设备 Reciprocating compressor, crushers,reciprocating feeder,machinery with severe load or reversing.	1.5	1.4	1.7

注：1. 采用适合的润滑油进行润滑处理。见19页。
正常环境温度范围为 -10°C~60°C。
2. 当环境温度低于-40°C，使用冷冻机油，用上述工作系数乘以2.0。

Note: 1. Appropriate lubricant and lubrication should be used. See page 19. The surrounding temperature of -10°C to 60°C is considered normal.
2. When the surrounding temperature is less than -40°C, use refrigerating machine oil and multiply the service factor above by 2.0.

链节距

使用可满足要求的最小节距链条。如果单排链不能满足要求，使用小节距多排链。如果因间距的限制，造成中心距短和链轮外径小，使用多排链和多齿链轮。

小链轮齿数

为达到低噪音、低撞击的传动效果，推荐小链轮齿数不低于17。但低速运行时可使用11齿链轮，高速时推荐使用齿数不低于25的链轮。

Horsepower ratings tables on the catalog are based on the following:

(1) Under normal atmosphere conditions
(2) Power transmission by single strand chain
(3) Service factor of Table 4 is 1.0
(4) Lubrication is appropriate.
(5) Two shafts to transmit power is horizontal, properly located and installed.
(6) Load variation is small.

To compensate for the loads imposed on the chain by the type of input power and the type of equipment to be driven, the selection of an appropriate service factor is required.

For multiple strand chains, apply a factor of multiple strand factor Table 5.

表5 多排链系数 Table 5 Multiple Strand Factors

链排数 Number of strands	多排链系数 Multiple strand factors
2	1.7
3	2.5
4	3.3
5	3.9
6	4.6

Chain Pitch

Use the smallest pitch chain that will meet requirements. If single strand chains can not satisfy requirements, use small pitch multiple strand chains. If the center distance should be short and the outside diameter of sprockets be small because of space restrictions, use multiple strand chains and sprockets with large number of teeth.

Number of Teeth for Small Sprockets

The recommended number of teeth for small sprockets is not less than 17 for a quieter drive with less impact. However, a sprocket with number of around 11 teeth can be used at a slow speed while at a high speed, the recommended number of teeth is not less than 25.

Hardened Teeth

It is a dvisable to harden sprockets under the following operating conditions:

- SLOW SPEED AND HEAVILY LOADED DRIVES
- HIGH SPEED DRIVES
- LARGE RATIO DRIVES
- ABRASIVE OR CORROSIVE CONDITIONS

OCM ANSI 35 to 100 B type sprockets are induction hardened.

Teeth of Large Sprockets

As the joint-wear of a roller chain progresses, it tends to jump or ride over the teeth of a sprocket. Chain life based on the joint- wear varies according to the number of teeth in large sprockets as shown in chart below.

硬化轮齿

下列情况下建议链轮硬化处理：

- 低速重载传动
- 高速传动
- 大比值传动
- 摩擦或腐蚀作业条件

OCM ANSI 35 ~ 100B型链轮为感应硬化产品。

大链轮齿

因滚子链的铰链不断地磨损，容易造成跳齿或脱链。根据下图所示的大链轮齿数，链条寿命因铰链磨损而改变链条寿命。

通常，当每一节距的伸长率在2-3%的范围内时为滚子链的使用寿命。这种情况下，大链轮齿数应为40到60。

最小的链条包角和传动比

建议小链轮的最小链条包角不得小于120° 以便达到平稳传动（理想运行）效果。为此，推荐单级减速装置速度比不超过1:7。如果需要大速度比，应使用双级减速装置。

Generally, the wear life of a roller chain is when the elongation per pitch is in the range of 2-3%. In this case, the number of teeth in large sprockets is 40 through 60.

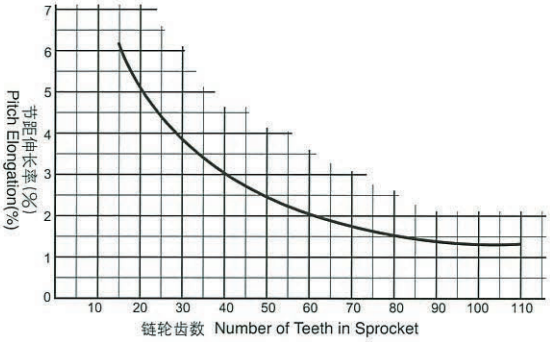

MInimum Chain Wrap and Drive Ratio

The suggested minimum chain wrap on the samall sprocket is not less than 120° to obtain smooth transmission (satisfactory operation). It is recommended therefore that the speed ratio for a single reduction drive be held not to exceed 1:7. If a large speed ratio is required, double reduction drive should be used.

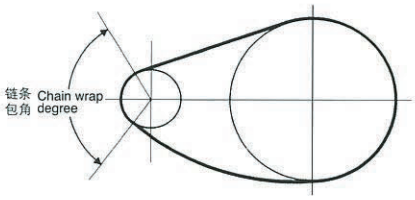

链轮孔径

确认选定的链轮孔径与传动轴配合。如果选定的链轮与传动轴不配合，选择不同的齿数。如果无法改变链轮齿数，核实传动轴的直径和最大孔径。采用下列公式计算得出最大孔径：

$$最大孔径 = P(\cot\frac{180}{N} - 1) - 0.76$$

P=链条节距，N=齿数

固弦齿作用产生的链速变化

咬合链轮的滚子链构成一个多边形。链条(位置)升降，链速发生变化。齿数越多，链速变化越小。当小链轮齿数增加时，链速变化减小。当齿数如下所示超过25时，速度变化减小。

工作系数

正常传输时，采用表4工作系数。但在下列运行条件下，应提高工作系数以达到良好传输效果。

- 频繁起动、停止
- 润滑不足
- 轴中心距短
- 传动布置为立式，小链轮设在下方。
- 从动链轮为两个以上
- 反转
- 载荷定期变化

链条的链节数与连接链节

我们推荐使用节距为偶数的链条长度，以免使用过渡链节。对于12页中所示的有关低速链条的选择，建议使用环形链条，无需使用连接链节或过渡链节。连接链节或过渡链节的疲劳强度(容许载荷)要低于普通链条。

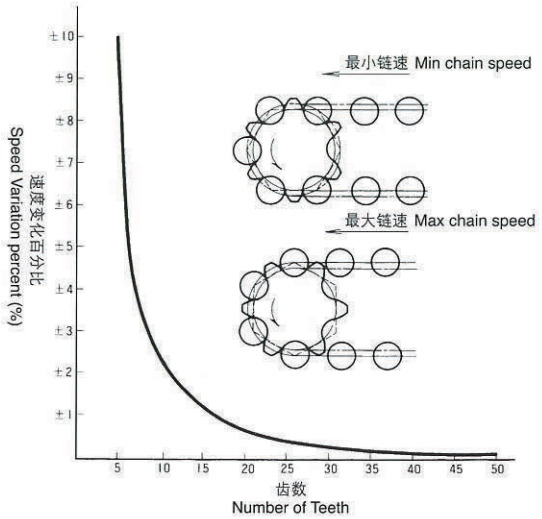

链条长度

根据滚子链传动装置的选择方法确定链条和链轮型式，并确定轴中心距，然后通过下列公式和表K的系数计算出所需链条长度。

$$L = \frac{N+n}{2} + 2C + \frac{K}{C}$$

Sprocket Bore Diameter

Make sure the bore capacity of the sprocket selected will accommodate the shaft. If the sprocket selected does not accommodate the shaft, select a different number of teeth. If you can not change the number of teeth in the sprocket, review the shaft dia. and. max. bore. The max bore is obtained using the formula.

$$Max.\ bore = P(\cot\frac{180}{N} - 1) - 0.76$$

P = Chain pitch
N = Number of teeth

Variation in Chain Speed due to Chordal Action

A roller chain that engages a sprocket forms a polygon. The (position) chain rises and falls, and a variation in chain speed occurs. The greater the number of teeth, the less will be the speed variation. The speed variation is reduced as the number of teeth on a small sprocket increases. A less speed variation is obtained as the number of teeth exceeds 25 as shown below.

Service Factor

For normal transmission, service factor Table 4 is used. However, under the following operating conditions, increase the service factors for better transmission.

- Frequent starts and stops
- Insufficient lubrication
- Shaft center distance is short
- A drive arrangement is vertical with a small sprocket located below
- Driven sprockets are more than two
- Reversing
- Load periodically varies

Number of Links of Chain and Connecting Link

We recommend that you use a chain length with an even number of pitches in order not to use an offset link. For low speed as shown in page 12 on low speed chain selection, we suggest chain endless is used without the use of a connecting or offset link. The fatigue strength (allowable load) of a connecting link and an offset link is lower than that of plain chain.

Length of Chain

If the type of chain and sprockets are determined on the basis of the selection method of roller chain drives and the shaft center distance is decided, the required length of chain is computed using the following formula and Table K factors.

$$L = \frac{N+n}{2} + 2C + \frac{K}{C}$$

L = CHAIN LENGTH, PITCHES
N = NUMBER OF TEETH IN LARGE SPROCKET
n = NUMBER OF TEETH IN SMALL SPROCKET
C = SHAFT CENTER, PITCHES
K = DETERMINE THE VALUE N-n, AND OBTAIN K FROM TABLE 6 K FACTORS

L = 链条长度，节数
N = 大链轮齿数
n = 小链轮齿数
C = 轴中心距，节数
K = 确定N–n值，从表6K系数中查K值

将小数圆整为整数后得到节数，当L为偶数时，要加一个过渡链节。建议避免使用过渡链节。可能情况下，通过调整轴中心距，或改变链轮齿数以便使用节数为偶数的链条。

轴中心距

链条长度和链轮齿数确定后，用下列公式计算轴中心距：

$$C = \frac{1}{8}\{2L-N-n+\sqrt{(2L-N-n)^2-0.811(N-n)^2}\}$$

C 为节数

链速和链条载荷

1. 从表2 单位链轮转速(rpm) 的链速可查取链速。表2 以外的链轮齿数可采用下列公式计算得出。

$$V = \frac{P.N.n}{1,000}\ (m/min.)$$

V = 链速 (M/MIN.)

P = 链条节距 (MM)

N = 链轮齿数

n = 链轮转速 (RPM)

2. 用下列公式计算链条载荷：

$$F = \frac{4.567HP}{V}\ (kg)$$

F = 链条载荷 (kg)

V = 链速 (m/min.)

注：电机起动和停止时，产生惯性，作用于链条上的载荷将大于电机的正常输出功率。

The number of pitches is obtained by omitting fractions. When L is an odd number, an offset link is required. We recommend that you avoid using an offset link. When possible, an even number of pitches by changing the shaft center distance or number of teeth on the sprocket is used.

Shaft Center Distance

If the length of chain and the number of teeth in the sprockets have already been determined, the shaft center distance is calculated using the following formula:

$$C = \frac{1}{8}\{2L-N-n+\sqrt{(2L-N-n)^2-0.811(N-n)^2}\}$$

C is Number of pitches

Chain Speed and Load on Chain

1. Chain speed is easily obtained from Table 2 chain speed per one rpm of sprocket.
   The number of teeth on sprockets other than those on the Table 2 is obtained using the following formula:

$$V = \frac{P.N.n}{1,000}\ (m/min.)$$

V = CHAIN SPEED (M/MIN)
P = CHAIN PITCH (MM)
N = NUMBER OF TEETH IN SPROCKET
n = RPM OF SPROCKET

2. Load on chain is found by the following formula:

$$F = \frac{4.567HP}{V}\ (kg)$$

F = Load on chain (kg)
V = Chain speed (m/min.)

Note : In case of starts and braking of an electric motor, inertia takes place, and a larger load than the normal output horsepower of the motor may impose on chain.

表6系数K
Table 6 Factors K

N-n	K	N-n	K	N-n	K	N-n	K	N-n	K	N-n	K	N-n	K	N-n	K	N-n	K	N-n	K
1	0.03	20	10.13	39	38.53	58	85.21	77	150.18	96	233.44	115	334.99	134	454.83	153	592.96	172	749.37
2	0.10	21	11.17	40	40.53	59	88.17	78	154.11	97	238.33	116	340.84	135	461.64	154	600.73	173	758.11
3	0.23	22	12.26	41	42.58	60	91.19	79	158.09	98	243.27	117	346.75	136	468.51	155	608.56	174	766.90
4	0.41	23	13.40	42	44.68	61	94.25	80	162.11	99	248.26	118	352.70	137	475.42	156	616.44	175	775.74
5	0.63	24	14.59	43	46.84	62	97.37	81	166.19	100	253.30	119	358.70	138	482.39	157	624.37	176	784.63
6	0.91	25	15.83	44	49.04	63	100.54	82	170.32	101	258.39	120	364.76	139	489.41	158	632.35	177	793.57
7	1.24	26	17.12	45	51.29	64	103.75	83	174.50	102	263.54	121	370.86	140	496.47	159	640.38	178	802.57
8	1.62	27	18.47	46	53.60	65	107.02	84	178.73	103	268.73	122	377.02	141	503.59	160	648.46	179	811.61
9	2.05	28	19.86	47	55.95	66	110.34	85	183.01	104	273.97	123	383.22	142	510.76	161	656.59	180	820.70
10	2.53	29	21.30	48	58.36	67	113.71	86	187.34	105	279.27	124	389.48	143	517.98	162	664.77	181	829.85
11	3.06	30	22.80	49	60.82	68	117.13	87	191.73	106	284.67	125	395.79	144	525.25	163	673.00	182	839.04
12	3.65	31	24.34	50	63.33	69	120.60	88	196.16	107	290.01	126	402.14	145	532.57	164	681.28	183	848.29
13	4.28	32	25.94	51	65.88	70	124.12	89	200.64	108	295.45	127	408.55	146	539.94	165	689.62	184	857.58
14	4.96	33	27.58	52	68.49	71	127.69	90	205.18	109	300.95	128	415.01	147	547.36	166	698.00	185	866.93
15	5.70	34	29.28	53	71.15	72	131.31	91	209.76	110	306.50	129	421.52	148	554.83	167	706.44		
16	6.48	35	31.03	54	73.86	73	134.99	92	214.40	111	312.09	130	428.08	149	562.36	168	714.92		
17	7.32	36	32.83	55	76.62	74	138.71	93	219.08	112	317.74	131	434.69	150	569.93	169	723.46		
18	8.21	37	34.68	56	79.44	75	142.48	94	223.82	113	323.44	132	441.36	151	577.56	170	732.05		
19	9.14	38	36.58	57	82.30	76	146.31	95	228.61	114	329.19	133	448.07	152	585.23	171	740.68		

安装与布置

优先推荐A,B和C布置，此布置在两个方向中的任一方向都可有效运行。

从实际应用情况考虑，在必须使用不推荐的布置情况下，需采用链条张紧装置或其他措施。如果轴中心距短，会增加链条旋转频率，加快链条伸长速度。总之，优选的中心距为链条节距的30至50倍。最小中心距应使两个链轮轮齿之间有充足间距。最小中心距不得小于大链轮直径加上小链轮直径的二分之一。

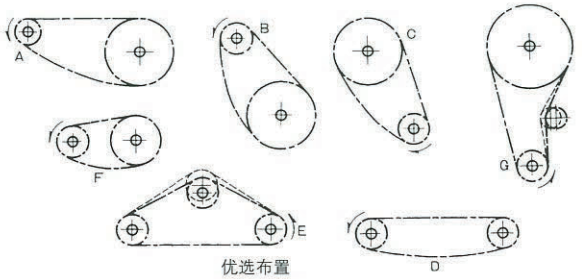

优选布置
Preferred arrangement

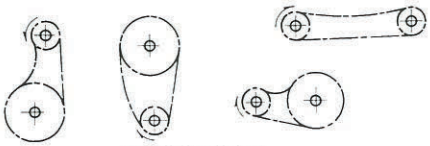

不推荐使用的布置
Least recommended arrangement

防止链条振动

因传输条件导致链条振动时，应安装一导向装置。

Installation and Arrangement

The arrangements A,B and C are preferred, and will operate satisfactorily in either direction.

If the least recommended arrangements are necessary due to application realities, chain tensioners or some other means are required. In case a shaft center distance is short, the frequency of chain rotations increases and the chain is inclined to elongate faster. In general, a preferred center distance is 30 to 50 times chain pitches. A minimum center distance should be sufficient to give clearance between the teeth of the two sprockets. The minimum center distance should be not less than the diameter of the large sprocket plus one half the diameter of the small sprocket.

Prevention of Chain Vibration

If a vibration takes place due to transmission conditions, please install a guide.

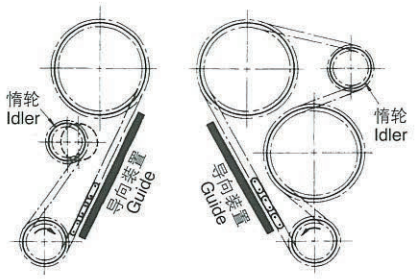

链条垂度

链条的垂度(SS')通常为跨度的4%。下列情况下的垂度应为跨度的2%。

(1) 传动装置的布置为立式或类似型式。
(2) 重载和频繁起动。
(3) 轴中心距大于1米。
(4) 链条运行方向经常换向。

如果链条伸长，通过移动轴位来调整中心距。为此从中心距外移一根轴2%，即可方便地调整中心距。

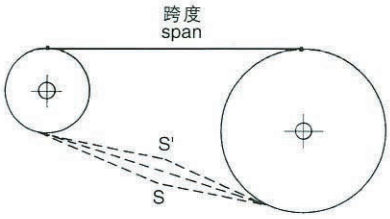

轴与链轮的调整

两轴间的距离D应相等，水平调整两个轴。用一直边靠在链轮表面，查看两链轮是否在同一平面。

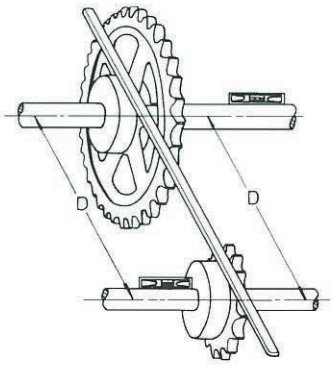

Chain Sag

The amount of chain sag (SS') is generally 4% of the span. The sag should be 2% of the span for the following applications:

(1) Drive arrangements are vertical or similar.
(2) Heavy load and frequent starts.
(3) Shaft center distance is more than one meter.
(4) Travel direction of chain is often reversed.

In case chain elongates, the center distance is adjusted by moving one shaft. It is convenient, therefore, that one shaft is made movable from the center distance by two percent.

Aligning Shafts and Sprockets

The distance D of two shafts should be the same and the two shafts should be aligned horizontally. Apply a straight edge to the sprocket surfaces to see if two sprockets are in the same plane.

润滑 LUBRICATION

链条的工作寿命期长主要取决于润滑。良好的润滑是达到链条理想寿命期的重要因素。请选用额定功率表中所示的润滑方式。

链条润滑油的使用

如图所示使用润滑油，让油充分润滑到链条的载荷部位，保持销轴、套筒和滚子之间的油膜。可降低磨损量，延长链条寿命。

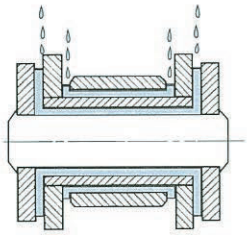

润滑油的选择

只能使用高质量润滑油。 特殊温度范围使用时，建议选用的润滑油如下列选择表所示。

选择表(粘度) Selection Table (Viscosity)

环境温度 SURROUNDING TEMPERATURE°C			SAE 粘度牌号 SAE VISCOSITY NUMBER
-10°C	~	0°C	SAE 20
0°C	~	40°C	30
40°C	~	50°C	40
50°C	~	60°C	50

注：
(1) 手动润滑时，如果链条滴油，应使用高粘度润滑油。
(2) 当环境温度低于-10°C时，推荐使用冷冻机油。
(3) 当环境温度高于60°C时，请与OCM联系。

The long service life of chain depends highly on lubrication. An optimum lubrication is an important factor in obtaining a desired life of chain. Please use the lubrication types as shown in the Horsepower ratings table.

Application of lubricant to chains

Apply oil as shown so that oil will arrive at bearing surfaces of chain and an oil film will be maintained among the pin, bushing and roller. The amount of wear is reduced and the life of chain is prolonged.

Selection of the lubricant

Use only high quality oil. The lubricants suggested for specific temperature ranges are shown in the following selection table.

Note:
(1) For manual lubrication, if oil drips from chain, use a high viscosity lubricant.
(2) If the surrounding temperature is less than-10°C it is recommended to use refrigerating machine oil.
(3) If the surrounding temperature is not less than 60, please consult us.

润滑方式 Type of Lubrication

I	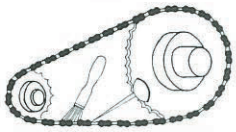	**手动润滑** 采用油刷或油壶涂抹润滑油。每隔4至8小时，在链条底部跨度的链板之间涂油。 **Manual lubrication** Oil is applied with a brush or oil can. Every 4 to 8 hours, the oil should be applied to between link plates in the lower span of the chain.
	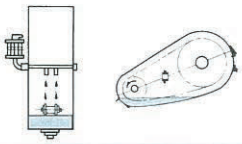	**滴油润滑** 采用一个简易外壳。用滴油器每分钟滴入约20滴，均匀滴入链板间。 **Drip feed lubriction** A simple casing is required. About twenty drops of oil per minute are distributed from a drip lubricator between the link plates.
II	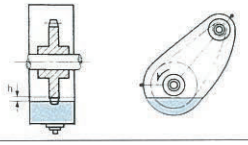	**油池润滑** 采用一个防漏外壳。将链条浸入油池，链轮的二分之一英寸浸入油中，如果浸入太深，会产生热量。 **Oil bath lubrication** A leak- proof casing is required. The chain dips into an oil reservoir. The sprockets should dip into the oil one half inch. If the sprocket dips too deep, heat is generated.
	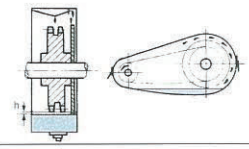	**转盘润滑** 采用一个防漏外壳，链条在油位上面运行，转盘的0.5到1英寸浸入油中。 **Disc lubrication** A leak proof casing is required. The chain operates above the oil level. The disc should dip into the oil one half to one inch.
III	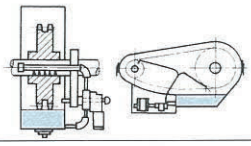	**强制循环泵润滑** 采用一个防漏外壳。通过泵使油循环，油应是冷却状态。 **Pump lubrication** A leak proof casing is required. The oil is circulated with a pump and the oil should be cooled.

每隔一段时间检查链条的传动情况，确保润滑系统正常工作。一旦链条和套筒失色、开槽、或擦伤磨损，无法充分润滑链条。为了达到良好的润滑效果，应定期拆卸并用煤油清洗链条，检查链条状况。

Chain drives should be inspected at intervals to assure that the lubrication is functioning properly. If the chain and bushing is discolored, grooved or galled, the chain will not be sufficiently lubricated. For better lubrication, inspect the chain after it is periodically removed and washed with kerosine.

OSB 系列滚子链
OSB SERIES ROLLER CHAIN

OCM介绍OSB系列、带无缝滚子、油壶设置在无缝套筒的滚子链。公司已拥有30多年的带油壶滚子链的制造经验。该链条的优点是采用无缝套筒，圆筒度高，负载面广，油壶可作为油池使用。
由于负载面广，油壶可作油池使用，与不带油壶、无润滑条件下的无缝套筒链条相比，耐磨损性提高，链条寿命延长30%。

OCM introduces, OSB Series, oil port oriented solid bush roller chain with solid roller. Over 30 years' experience of manufacturing oil port roller chain made this possible. It incorporates the advantage of solid bush, cylindrical roundness, making a large bearing area and oil port as oil reservoir.
The large bearing area and oil port, acting as an oil reservoir, improve the wear resistance and prolong the chain life by 30% as compared with solid bush chain without oil port under no lubricating condition.

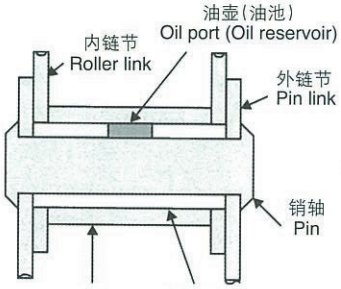

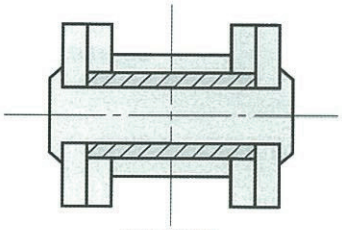

高圆筒度
Cylindrical roundness

设置在负载面以外的油壶
Oil port oriented away from bearing area

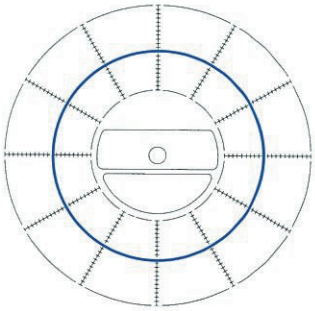

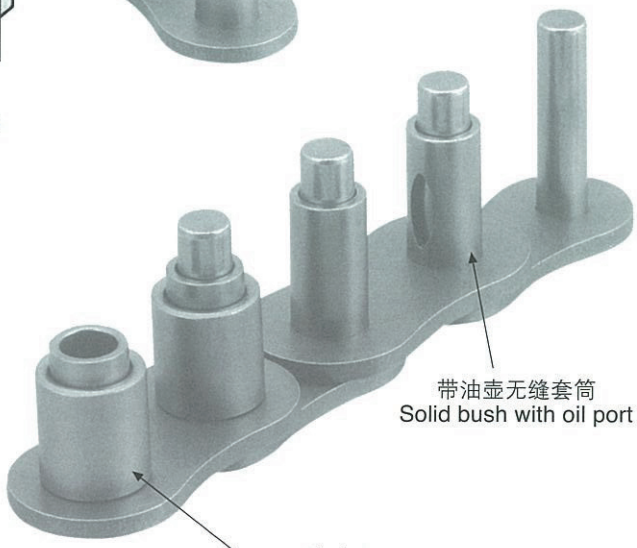

带油壶无缝套筒
Solid bush with oil port

无缝滚子
Solid roller

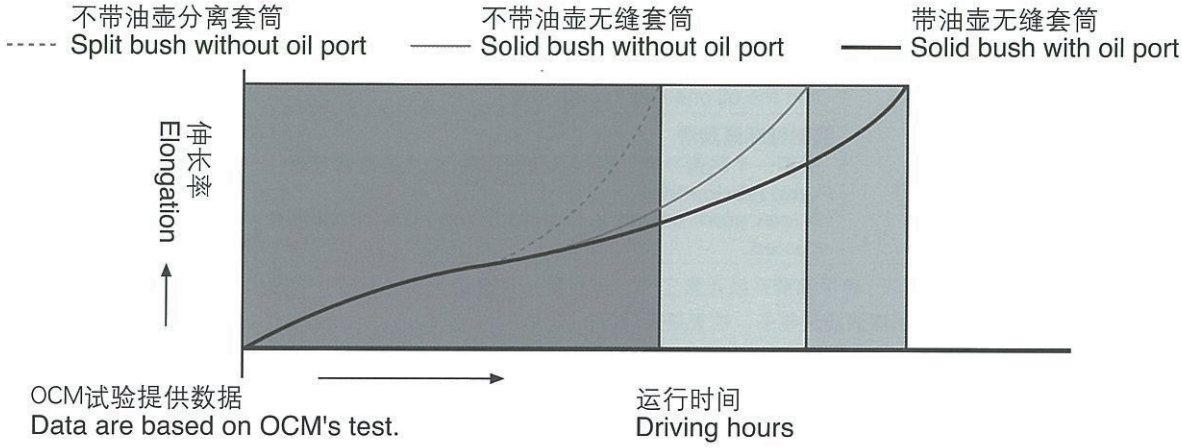

OCM试验提供数据
Data are based on OCM's test.

OSB 系列滚子链
OSB SERIES ROLLER CHAIN

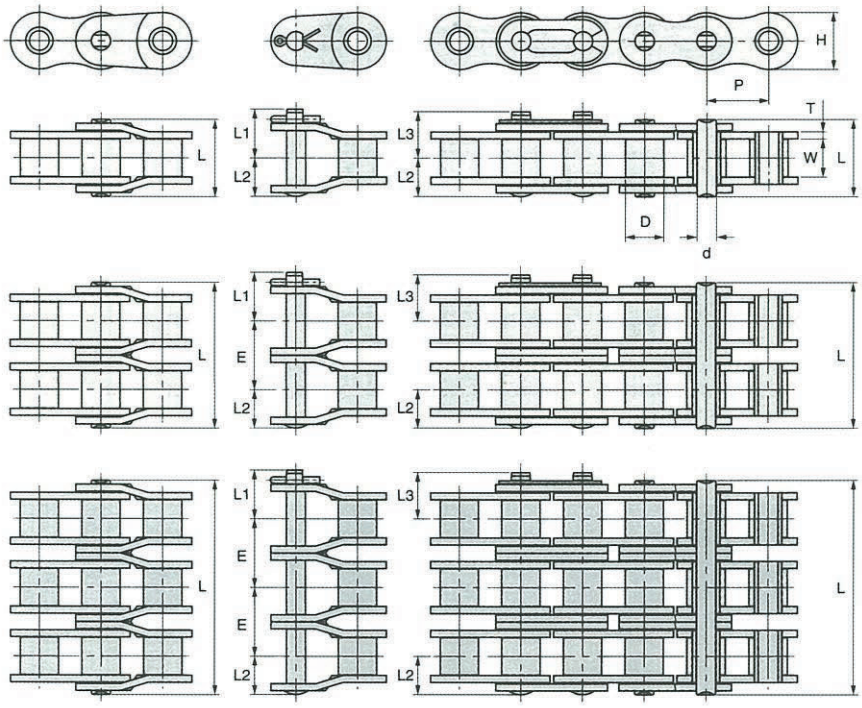

单位UNIT :inch

OCM 链号 Chain No.	节距 Pitch P	滚子直径 Roller Diam. D	内节内宽 Width between L.P. W	链板 Link Plate H	链板 Link Plate T	销轴直径 Pin Diam. d	销轴 Pin L	销轴 Pin L1	销轴 Pin L2	销轴 Pin L3	排距 Trans Pitch E	平均抗拉强度 Average Tensile Strength Lbs	最大工作载荷 Max. Working Load Lbs	概略重量 Approx Weight Lbs/ft
OSB 40-1							0.634					4,290	860	0.44
OSB 40-2	0.500	0.312	0.313	0.472	0.059	0.156	1.201	0.402	0.319	0.382	0.567	8,590	1,450	0.87
OSB 40-3							1.772					12,880	2,130	1.30
OSB 50-1							0.799					7,160	1,380	0.73
OSB 50-2	0.625	0.400	0.376	0.591	0.079	0.200	1.512	0.476	0.409	0.476	0.713	14,330	2,350	1.43
OSB 50-3							2.228					21,400	3,460	2.14
OSB 60-1							1.000					9,920	2,090	1.08
OSB 60-2	0.750	0.469	0.500	0.709	0.094	0.234	1.898	0.598	0.500	0.579	0.898	19,840	3,540	2.08
OSB 60-3							2.799					29,760	5,220	3.09
OSB 80-1							1.287					17,630	3,630	1.88
OSB 80-2	1.000	0.625	0.626	0.949	0.126	0.313	2.445	0.776	0.709	0.740	1.154	35,270	6,180	3.76
OSB 80-3							3.598					52,900	9,090	5.58
OSB 100-1							1.571					26,450	5,510	2.82
OSB 100-2	1.250	0.750	0.754	1.185	0.157	0.375	2.980	0.925	0.846	0.787	1.409	52,900	9,370	5.64
OSB 100-3							4.394					79,360	13,770	8.40
OSB 120-1							1.972					37,030	7,270	4.17
OSB 120-2	1.500	0.875	1.006	1.425	0.189	0.437	3.764	1.118	1.071	0.988	1.787	74,070	12,360	8.20
OSB 120-3							5.551					111,110	18,180	12.30
OSB 140-1							2.134					48,720	9,700	5.17
OSB 140-2	1.750	1.000	1.004	1.661	0.220	0.500	4.063	1.252	1.150	1.067	1.925	97,440	16,490	10.15
OSB 140-3							5.988					146,160	24,250	15.19
OSB* 160-1							2.476					60,180	12,120	6.65
OSB* 160-2	2.000	1.125	1.262	1.898	0.252	0.563	4.780	1.437	1.378	1.236	2.303	120,370	20,610	13.17
OSB* 160-3							7.083					180,550	30,310	19.69
OSB* 200-1							3.063					101,410	15,870	11.09
OSB* 200-2	2.500	1.562	1.512	2.374	0.315	0.781	5.882	1.811	1.681	1.531	2.819	202,820	26,980	21.84
OSB* 200-3							8.701					304,230	39,680	32.66
OSB* 240-1							3.717					149,910	21,820	16.66
OSB* 240-2	3.000	1.875	1.902	2.850	0.374	0.937	7.173	2.157	2.043	1.858	3.457	299,820	37,100	32.93
OSB* 240-3							10.630					449,740	54,560	49.12

40~60的连接链节为卡簧片式。80的有卡簧片式和开口销式。100~240为开口销式。
*注：指不带油壶的无缝套筒滚子链。
Connecting link for 40 through 60 is spring clip. Spring clip and cotter for 80 are available. Cotter type for 100 through 240.
*indicates roller chain with solid bush but without oil port.

OCM ANSI滚子链 ANSI ROLLER CHAIN

链号 Chain No. 25

节距 Pitch ● 0.250inch / 6.35mm

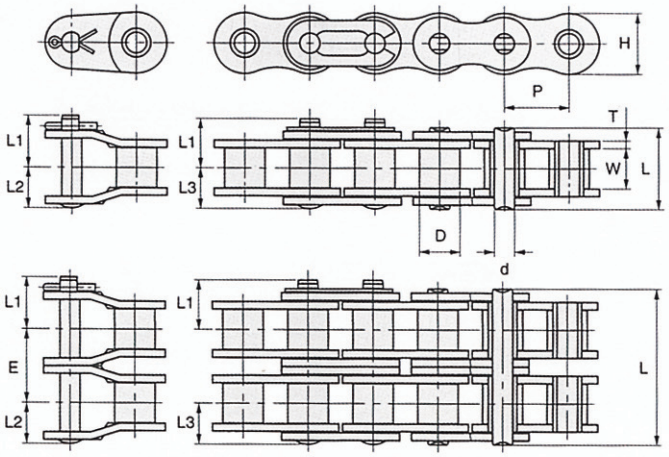

单位UNIT 上方Upper:inch
下方Beneath:mm

OCM 链号 Chain No.	ANSI 链号 ANSI No.	节距 Pitch P	滚子直径 Roller Diam. D	内节内宽 Width between L.P. W	链板 Link Plate H	链板 Link Plate T	销轴直径 Pin Diam. d	销轴 Pin L	销轴 Pin L1	销轴 Pin L2	销轴 Pin L3	排距 Trans Pitch E	平均抗拉强度 Average Tensile Strength Lb/kg	最大工作载荷 Max. Working Load Lb/kg	概略重量 Approx Weight Lb/ft kg/m
OCM25	25	0.250	0.130	0.126	0.230	0.030	0.091	0.307	0.189	0.162	0.154	0.252	1,058	154	0.087
		6.35	3.3	3.2	5.85	0.75	2.30	7.8	4.8	4.1	3.9	6.4	480	70	0.13
OCM25-2	25-2	0.250	0.130	0.126	0.230	0.030	0.091	0.563	0.189	0.162	0.154	0.252	2,117	243	0.180
		6.35	3.3	3.2	5.85	0.75	2.30	14.3	4.8	4.1	3.9	6.4	960	110	0.27

1. 链条不带滚子。仅铆头环接式有。
注:尺寸会有变化。根据要求提供合格尺寸。
1. Chain is rollerless. Available only in rivetted construction.
Note: Dimensions subject to change. Certified dimensions furnished upon request.

单排滚子链额定功率
HORSEPOWER RATINGS SINGLE STRAND ROLLER CHAIN

小链轮齿数 No. of Teeth Small Spkt.	小链轮每分钟转数(rpm) REVOLUTIONS PER MINUTE-SMALL SPROCKET 50	100	300	500	700	900	1200	1500	1800	2100	2500	3000	3500	4000	4500	5000	5500	6000	6500	7000	7500	8000	8500	9000	10000
11	0.03	0.05	0.14	0.23	0.31	0.39	0.50	0.62	0.73	0.83	0.98	1.15	1.32	1.38	1.16	0.99	0.86	0.75	0.67	0.60	0.54	0.49	0.45	0.41	0.35
12	0.03	0.06	0.16	0.25	0.34	0.43	0.55	0.68	0.80	0.92	1.07	1.26	1.45	1.57	1.32	1.12	0.97	0.86	0.76	0.68	0.61	0.56	0.51	0.47	0.40
13	0.04	0.06	0.17	0.27	0.37	0.47	0.60	0.74	0.87	1.00	1.17	1.38	1.58	1.77	1.49	1.27	1.10	0.96	0.86	0.77	0.69	0.63	0.57	0.53	0.45
14	0.04	0.07	0.19	0.30	0.40	0.50	0.65	0.80	0.94	1.08	1.27	1.49	1.71	1.93	1.66	1.42	1.23	1.08	0.96	0.86	0.77	0.70	0.64	0.59	0.50
15	0.04	0.07	0.20	0.32	0.43	0.54	0.70	0.86	1.01	1.17	1.36	1.61	1.85	2.08	1.84	1.57	1.36	1.20	1.06	0.95	0.86	0.78	0.71	0.65	0.56
16	0.04	0.08	0.22	0.34	0.47	0.58	0.76	0.92	1.09	1.25	1.46	1.72	1.98	2.23	2.03	1.73	1.50	1.32	1.17	1.05	0.94	0.86	0.78	0.72	0.61
17	0.05	0.08	0.23	0.37	0.50	0.62	0.81	0.99	1.16	1.33	1.56	1.84	2.11	2.38	2.22	1.90	1.64	1.44	1.28	1.14	1.03	0.94	0.86	0.79	0.67
18	0.05	0.09	0.25	0.39	0.53	0.66	0.86	1.05	1.24	1.42	1.66	1.96	2.25	2.53	2.42	2.07	1.79	1.57	1.39	1.25	1.12	1.02	0.93	0.86	0.73
19	0.05	0.09	0.26	0.41	0.56	0.70	0.91	1.11	1.31	1.50	1.76	2.07	2.38	2.69	2.62	2.24	1.94	1.70	1.51	1.35	1.22	1.11	1.01	0.93	0.79
20	0.06	0.10	0.28	0.44	0.59	0.74	0.96	1.17	1.38	1.59	1.86	2.19	2.52	2.84	2.83	2.42	2.10	1.84	1.63	1.46	1.32	1.20	1.09	1.00	0.86
21	0.06	0.11	0.29	0.46	0.62	0.78	1.01	1.24	1.46	1.68	1.96	2.31	2.66	2.99	3.05	2.60	2.26	1.98	1.76	1.57	1.42	1.29	1.17	1.08	0.92
22	0.06	0.11	0.31	0.48	0.66	0.82	1.07	1.30	1.53	1.76	2.06	2.43	2.79	3.15	3.27	2.79	2.42	2.12	1.88	1.69	1.52	1.38	1.26	1.16	0.99
23	0.06	0.12	0.32	0.51	0.69	0.86	1.12	1.37	1.61	1.85	2.16	2.55	2.93	3.30	3.50	2.98	2.59	2.27	2.01	1.80	1.62	1.47	1.35	1.24	1.06
24	0.07	0.13	0.34	0.53	0.72	0.90	1.17	1.43	1.69	1.94	2.27	2.67	3.07	3.46	3.73	3.18	2.76	2.42	2.15	1.92	1.73	1.57	1.44	1.32	1.12
25	0.07	0.13	0.35	0.56	0.75	0.94	1.22	1.50	1.76	2.02	2.37	2.79	3.21	3.61	3.96	3.38	2.93	2.57	2.28	2.04	1.84	1.67	1.53	1.40	1.20
26	0.07	0.14	0.37	0.58	0.79	0.98	1.28	1.56	1.84	2.11	2.47	2.91	3.34	3.77	4.19	3.59	3.11	2.73	2.42	2.17	1.95	1.77	1.62	1.49	1.27
28	0.08	0.15	0.40	0.63	0.85	1.07	1.38	1.69	1.99	2.29	2.68	3.15	3.62	4.09	4.54	4.01	3.47	3.05	2.70	2.42	2.18	1.98	1.81	1.66	1.42
30	0.08	0.16	0.43	0.68	0.92	1.15	1.49	1.82	2.15	2.46	2.88	3.40	3.90	4.40	4.89	4.45	3.85	3.38	3.00	2.68	2.42	2.20	2.01	1.84	1.57
32	0.09	0.17	0.46	0.73	0.98	1.23	1.60	1.95	2.30	2.64	3.09	3.64	4.18	4.72	5.25	4.90	4.25	3.73	3.30	2.96	2.67	2.42	2.21	2.03	1.73
35	0.10	0.19	0.51	0.80	1.08	1.36	1.76	2.15	2.53	2.91	3.41	4.01	4.61	5.20	5.78	5.60	4.86	4.26	3.78	3.38	3.05	2.77	2.53	2.32	1.98
40	0.12	0.22	0.58	0.92	1.25	1.57	2.03	2.48	2.93	3.36	3.93	4.64	5.32	6.00	6.68	6.85	5.93	5.21	4.62	4.13	3.73	3.38	3.09	2.83	2.42
润滑 Lubrication	I					II									III										

润滑方式见第19页
多排链的额定功率，用上述额定功率乘以第13页中的多排链系数得出。
注:尺寸会有变化。根据要求提供合格尺寸。
See page 19 for lubrication type.
For horsepower ratings of multiple strand, multiply the horsepower above by multiple strand factor on page 13.
Note: Dimensions subject to change. Certified dimensions furnished upon request.

OCM ANSI滚子链 ANSI ROLLER CHAIN

链号 Chain No. 35

节距 Pitch ● 0.375inch / 9.525mm

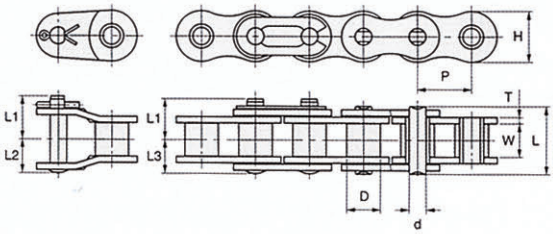

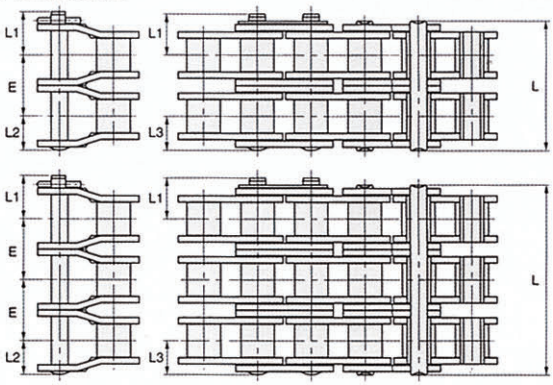

单位UNIT 上方Upper:inch
下方Beneath:mm

OCM 链号 Chain No.	ANSI 链号 ANSI No.	节距 Pitch P	滚子直径 Roller Diam. D	内节内宽 Width between L.P. W	链板 Link Plate H	链板 Link Plate T	销轴直径 Pin Diam. d	销轴 Pin L	销轴 Pin L1	销轴 Pin L2	销轴 Pin L3	排距 Trans Pitch E	平均抗拉强度 Average Tensile Strength Lb/kg	最大工作载荷 Max. Working Load Lb/kg	概略重量 Approx Weight Lb/ft kg/m
OCM35	35	0.375	0.200	0.189	0.355	0.049	0.141	0.461	0.264	0.252	0.240	0.398	2,602	419	0.242
		9.525	5.08	4.8	9.0	1.25	3.58	11.7	6.7	6.4	6.1	10.1	1,180	190	0.36
OCM35-2	35-2	0.375	0.200	0.189	0.355	0.049	0.141	0.863	0.264	0.252	0.240	0.398	5,204	706	0.470
		9.525	5.08	4.8	9.0	1.25	3.58	21.9	6.7	6.4	6.1	10.1	2,360	320	0.70
OCM35-3	35-3	0.375	0.200	0.189	0.355	0.049	0.141	1.261	0.264	0.252	0.240	0.398	7,806	1,036	0.692
		9.525	5.08	4.8	9.0	1.25	3.58	32.0	6.7	6.4	6.1	10.1	3,540	470	1.03
OCM35-4	35-4	0.375	0.200	0.189	0.355	0.049	0.141	1.659	0.264	0.252	0.240	0.398	10,408	1,367	0.921
		9.525	5.08	4.8	9.0	1.25	3.58	42.1	6.7	6.4	6.1	10.1	4,720	620	1.37

1. 链条不带滚子。仅铆头环接式有。
注：尺寸会有变化。根据要求提供合格尺寸。
1. Chain is rollerless. Available only in rivetted construction.
Note: Dimensions subject to change. Certified dimensions furnished upon request.

单排滚子链额定功率
HORSEPOWER RATINGS SINGLE STRAND ROLLER CHAIN

小链轮齿数 No. of Teeth Small Spkt.	小链轮每分钟转数(rpm) REVOLUTIONS PER MINUTE-SMALL SPROCKET 50	100	300	500	700	900	1200	1500	1800	2100	2500	3000	3500	4000	4500	5000	5500	6000	6500	7000	7500	8000	8500	9000	10000
11	0.10	0.18	0.49	0.77	1.05	1.31	1.70	2.08	2.45	2.82	3.30	2.94	2.33	1.91	1.60	1.37	1.18	1.04	0.92	0.82	0.74	0.67	0.62	0.57	0.48
12	0.11	0.20	0.54	0.85	1.15	1.44	1.87	2.29	2.70	3.10	3.62	3.35	2.66	2.17	1.82	1.56	1.35	1.18	1.05	0.94	0.85	0.77	0.70	0.64	0.55
13	0.12	0.22	0.59	0.93	1.26	1.57	2.04	2.49	2.94	3.38	3.95	3.77	3.00	2.45	2.05	1.75	1.52	1.33	1.18	1.06	0.95	0.87	0.79	0.73	0.62
14	0.13	0.24	0.63	1.01	1.36	1.71	2.21	2.70	3.18	3.66	4.28	4.22	3.35	2.74	2.30	1.96	1.70	1.49	1.32	1.18	1.07	0.97	0.88	0.81	0.69
15	0.14	0.25	0.68	1.08	1.47	1.84	2.38	2.91	3.43	3.94	4.61	4.68	3.71	3.04	2.55	2.17	1.88	1.65	1.47	1.31	1.18	1.07	0.98	0.90	0.77
16	0.15	0.27	0.73	1.16	1.57	1.97	2.55	3.12	3.68	4.22	4.94	5.15	4.09	3.35	2.81	2.40	2.08	1.82	1.62	1.45	1.30	1.18	1.08	0.99	0.85
17	0.16	0.29	0.78	1.24	1.68	2.10	2.73	3.33	3.93	4.51	5.28	5.64	4.48	3.67	3.07	2.62	2.27	2.00	1.77	1.58	1.43	1.30	1.18	1.09	0.93
18	0.17	0.31	0.83	1.32	1.78	2.24	2.90	3.54	4.18	4.80	5.61	6.15	4.88	3.99	3.35	2.86	2.48	2.17	1.93	1.73	1.56	1.41	1.29	1.18	1.01
19	0.18	0.33	0.88	1.40	1.89	2.37	3.07	3.76	4.43	5.09	5.95	6.67	5.29	4.33	3.63	3.10	2.69	2.36	2.09	1.87	1.69	1.53	1.40	1.28	1.10
20	0.19	0.35	0.93	1.48	2.00	2.51	3.25	3.97	4.68	5.38	6.29	7.20	5.72	4.68	3.92	3.35	2.90	2.55	2.26	2.02	1.82	1.65	1.51	1.39	1.18
21	0.20	0.37	0.98	1.56	2.11	2.64	3.42	4.19	4.93	5.67	6.63	7.75	6.15	5.03	4.22	3.60	3.12	2.74	2.43	2.17	1.96	1.78	1.62	1.49	1.27
22	0.21	0.38	1.03	1.64	2.22	2.78	3.60	4.40	5.19	5.96	6.97	8.21	6.59	5.40	4.52	3.86	3.35	2.94	2.61	2.33	2.10	1.91	1.74	1.60	1.37
23	0.22	0.40	1.08	1.72	2.33	2.92	3.78	4.62	5.44	6.25	7.31	8.62	7.05	5.77	4.83	4.13	3.58	3.14	2.79	2.49	2.25	2.04	1.86	1.71	1.46
24	0.23	0.42	0.14	1.80	2.44	3.05	3.96	4.84	5.70	6.55	7.66	9.02	7.51	6.15	5.15	4.40	3.81	3.35	2.97	2.66	2.40	2.17	1.99	1.82	1.56
25	0.24	0.44	1.19	1.88	2.55	3.19	4.13	5.05	5.95	6.84	8.00	9.43	7.99	6.54	5.48	4.68	4.05	3.56	3.16	2.82	2.55	2.31	2.11	1.94	1.65
26	0.25	0.46	1.24	1.96	2.66	3.33	4.31	5.27	6.21	7.14	8.35	9.84	8.47	6.93	5.81	4.96	4.30	3.77	3.35	3.00	2.70	2.45	2.24	2.05	1.75
28	0.27	0.50	1.34	2.12	2.88	3.61	4.67	5.71	6.73	7.73	9.05	10.7	9.47	7.75	6.49	5.55	4.81	4.22	3.74	3.35	3.02	2.74	2.50	2.30	1.96
30	0.29	0.54	1.45	2.29	3.10	3.89	5.03	6.15	7.25	8.33	9.74	11.5	10.5	8.59	7.20	6.15	5.33	4.68	4.15	3.71	3.35	3.04	2.77	2.55	2.17
32	0.31	0.58	1.55	2.45	3.32	4.17	5.40	6.60	7.77	8.93	10.4	12.3	11.6	9.47	7.93	6.77	5.87	5.15	4.57	4.09	3.69	3.35	3.06	2.81	0
35	0.34	0.64	1.71	2.70	3.66	4.59	5.95	7.27	8.56	9.84	11.5	13.6	13.2	10.8	9.08	7.75	6.72	5.90	5.23	4.68	4.22	3.83	3.50	3.21	0
40	0.39	0.73	1.97	3.12	4.23	5.30	6.87	8.40	9.89	11.4	13.3	15.7	16.2	13.2	11.1	9.47	8.21	7.20	6.39	5.72	5.15	4.68	0		
润滑 Lubrication	I						II						III												

润滑方式见第19页
多排链的额定功率，用上述额定功率乘以第13页中的多排链系数得出。
注：尺寸会有变化。根据要求提供合格尺寸。
See page 19 for lubrication type.
For horsepower ratings of multiple strand, multiply the horsepower above by multiple strand factor on page 13.
Note: Dimensions subject to change. Certified dimensions furnished upon request.

OCM ANSI滚子链 ANSI ROLLER CHAIN

链号 Chain No. 41

节距 Pitch ● 0.500inch / 12.70mm

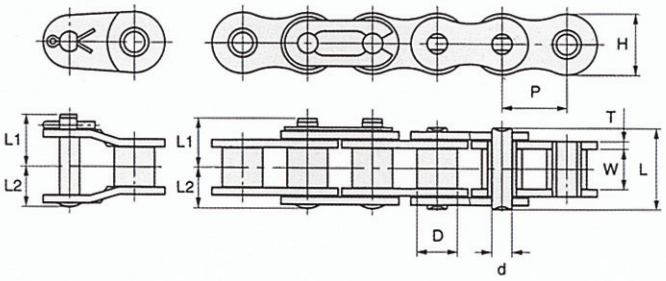

单位UNIT 上方Upper:inch
下方Beneath:mm

OCM 链号 Chain No.	ANSI 链号 ANSI No.	节距 Pitch P	滚子直径 Roller Diam. D	内节内宽 Width between L.P. W	链板 Link Plate H	链板 Link Plate T	销轴直径 Pin Diam. d	销轴 Pin L	销轴 Pin L1	销轴 Pin L2	平均抗拉强度 Average Tensile Strength Lb/kg	最大工作载荷 Max. Working Load Lb/kg	概略重量 Approx Weight Lb/ft kg/m
OCM41	41	0.500 12.70	0.306 7.77	0.252 6.4	0.382 9.7	0.049 1.25	0.141 3.58	0.524 13.3	0.315 8.0	0.268 6.8	2,392 1,090	463 210	0.273 0.41

1. 没有多排链条。
2. 仅铆头环接式有。
注：尺寸会有变化。根据要求提供合格尺寸。
1. No multiple strand is available.
2. Available only in rivetted construction.
Note: Dimensions subject to change. Certified dimensions furnished upon request.

单排滚子链额定功率
HORSEPOWER RATINGS SINGLE STRAND ROLLER CHAIN

小链轮齿数 No. of Teeth Small Spkt.	小链轮每分钟转数(rpm) REVOLUTIONS PER MINUTE-SMALL SPROCKET 10	25	50	100	200	300	400	500	700	900	1000	1200	1400	1600	1800	2100	2400	2700	3000	3500	4000	5000	6000	7000	8000
11	0.03	0.07	0.13	0.24	0.44	0.64	0.82	1.01	1.37	1.71	1.88	1.71	1.36	1.11	0.93	0.74	0.61	0.51	0.43	0.34	0.28	0.20	0.15	0.12	0.10
12	0.03	0.07	0.14	0.26	0.49	0.70	0.91	1.11	1.50	1.88	2.07	1.95	1.55	1.27	1.06	0.84	0.69	0.58	0.49	0.39	0.32	0.23	0.17	0.14	0.11
13	0.04	0.08	0.15	0.28	0.53	0.76	0.99	1.21	1.63	2.05	2.25	2.20	1.75	1.43	1.20	0.95	0.78	0.65	0.56	0.44	0.36	0.26	0.20	0.16	0.13
14	0.04	0.09	0.16	0.31	0.57	0.83	1.07	1.31	1.77	2.22	2.44	2.46	1.95	1.60	1.34	1.06	0.87	0.73	0.62	0.49	0.40	0.29	0.22	0.17	0.14
15	0.04	0.09	0.18	0.33	0.62	0.89	1.15	1.41	1.91	2.39	2.63	2.73	2.17	1.77	1.49	1.18	0.96	0.81	0.69	0.55	0.45	0.32	0.24	0.19	0.16
16	0.04	0.10	0.19	0.36	0.66	0.95	1.24	1.51	2.05	2.57	2.82	3.01	2.39	1.95	1.64	1.30	1.06	0.89	0.76	0.60	0.49	0.35	0.27	0.21	0.17
17	0.05	0.11	0.20	0.38	0.71	1.02	1.32	1.61	2.18	2.74	3.01	3.29	2.61	2.14	1.79	1.42	1.16	0.98	0.83	0.66	0.54	0.39	0.29	0.23	0.19
18	0.05	0.12	0.22	0.40	0.75	1.08	1.40	1.72	2.32	2.91	3.20	3.59	2.85	2.33	1.95	1.55	1.27	1.06	0.91	0.72	0.59	0.42	0.32	0.25	0
19	0.05	0.12	0.23	0.43	0.80	1.15	1.49	1.82	2.46	3.09	3.40	3.89	3.09	2.53	2.12	1.68	1.38	1.15	0.98	0.78	0.64	0.46	0.35	0.28	0
20	0.06	0.13	0.24	0.45	0.84	1.21	1.57	1.92	2.60	3.26	3.59	4.20	3.33	2.73	2.29	1.81	1.49	1.24	1.06	0.84	0.69	0.49	0.38	0.30	0
21	0.06	0.14	0.26	0.48	0.89	1.28	1.66	2.03	2.74	3.44	3.78	4.46	3.59	2.94	2.46	1.95	1.60	1.34	1.14	0.91	0.74	0.53	0.40	0.32	0
22	0.06	0.14	0.27	0.50	0.93	1.35	1.74	2.13	2.89	3.62	3.98	4.69	3.85	3.15	2.64	2.09	1.71	1.44	1.23	0.97	0.80	0.57	0.43	0.34	0
23	0.06	0.15	0.28	0.53	0.98	1.41	1.83	2.24	3.03	3.80	4.17	4.92	4.11	3.37	2.82	2.24	1.83	1.54	1.31	1.04	0.85	0.61	0.46	0.37	0
24	0.07	0.16	0.29	0.55	1.03	1.48	1.92	2.34	3.17	3.97	4.37	5.15	4.38	3.59	3.01	2.39	1.95	1.64	1.40	1.11	0.91	0.65	0.49	0.39	0
25	0.07	0.17	0.31	0.57	1.07	1.55	2.00	2.45	3.31	4.15	4.57	5.38	4.66	3.81	3.20	2.54	2.08	1.74	1.49	1.18	0.96	0.69	0.53	0	
26	0.07	0.17	0.32	0.60	1.12	1.61	2.09	2.55	3.46	4.33	4.76	5.61	4.94	4.05	3.39	2.69	2.20	1.85	1.58	1.25	1.02	0.73	0.56	0	
28	0.08	0.19	0.35	0.65	1.21	1.75	2.26	2.77	3.74	4.69	5.16	6.08	5.52	4.52	3.79	3.01	2.46	2.06	1.76	1.40	1.14	0.82	0.62	0	
30	0.08	0.20	0.38	0.70	1.31	1.88	2.44	2.98	4.03	5.06	5.56	6.55	6.13	5.01	4.20	3.33	2.73	2.29	1.95	1.55	1.27	0.91	0.69	0	
32	0.09	0.22	0.40	0.75	1.40	2.02	2.61	3.20	4.33	5.42	5.96	7.03	6.75	5.52	4.63	3.67	3.01	2.52	2.15	1.71	1.40	1.00	0		
35	0.10	0.24	0.44	0.83	1.54	2.22	2.88	3.52	4.76	5.97	6.57	7.74	7.72	6.32	5.29	4.20	3.44	2.88	2.46	1.95	1.60	1.14	0		
40	0.12	0.27	0.51	0.96	1.78	2.57	3.33	4.07	5.50	6.90	7.59	8.94	9.43	7.72	6.47	5.13	4.20	3.52	3.01	2.39	1.95	1.40	0		
润滑 Lubrication	I					II							III												

润滑方式见第19页
多排链的额定功率，用上述额定功率乘以第13页中的多排链系数得出。
注：尺寸会有变化。根据要求提供合格尺寸。
See page 19 for lubrication type.
For horsepower ratings of multiple strand, multiply the horsepower above by multiple strand factor on page 13.
Note: Dimensions subject to change. Certified dimensions furnished upon request.

OCM ANSI滚子链 ANSI ROLLER CHAIN

链号 Chain No. 40

节距 Pitch ● 0.500inch / 12.70mm

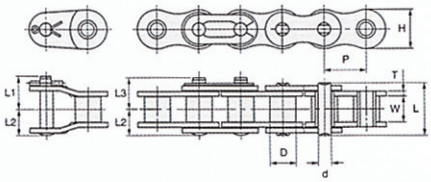

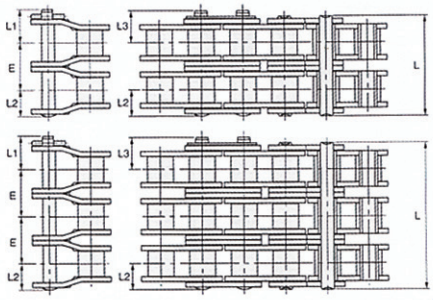

单位UNIT 上方Upper:inch
下方Beneath:mm

OCM 链号 Chain No.	ANSI 链号 ANSI No.	节距 Pitch P	滚子直径 Roller Diam. D	内节内宽 Width between L.P. W	链板 Link Plate H	链板 Link Plate T	销轴直径 Pin Diam. d	销轴 Pin L	销轴 Pin L1	销轴 Pin L2	销轴 Pin L3	排距 Trans Pitch E	平均抗拉强度 Average Tensile Strength Lb/kg	最大工作载荷 Max. Working Load Lb/kg	概略重量 Approx Weight Lb/ft kg/m
OCM40	40	0.500	0.313	0.313	0.473	0.059	0.156	0.634	0.402	0.319	0.382	0.567	4,300	860	0.443
		12.70	7.94	7.95	12.0	1.5	3.96	16.1	10.2	8.1	9.7	14.4	1,950	390	0.66
OCM40-2	40-2	0.500	0.313	0.313	0.473	0.059	0.156	1.202	0.402	0.319	0.382	0.567	8,600	1,455	0.874
		12.70	7.94	7.95	12.0	1.5	3.96	30.5	10.2	8.1	9.7	14.4	3,900	660	1.30
OCM40-3	40-3	0.500	0.313	0.313	0.473	0.059	0.156	1.773	0.402	0.319	0.382	0.567	12,900	2,139	1.304
		12.70	7.94	7.95	12.0	1.5	3.96	45.0	10.2	8.1	9.7	14.4	5,850	970	1.94
OCM40-4	40-4	0.500	0.313	0.313	0.473	0.059	0.156	2.340	0.402	0.319	0.382	0.567	17,199	2,822	10.617
		12.70	7.94	7.95	12.0	1.5	3.96	59.4	10.2	8.1	9.7	14.4	7,800	1,280	2.59
OCM40-5	40-5	0.500	0.313	0.313	0.473	0.059	0.156	2.908	0.402	0.319	0.382	0.567	21,499	3,352	2.170
		12.70	7.94	7.95	12.0	1.5	3.96	73.8	10.2	8.1	9.7	14.4	9,750	1,520	3.23
OCM40-6	40-6	0.500	0.313	0.313	0.473	0.059	0.156	3.475	0.402	0.319	0.382	0.567	25,799	3,947	2.600
		12.70	7.94	7.95	12.0	1.5	3.96	88.2	10.2	8.1	9.7	14.4	11,700	1,790	3.87

1. 销轴结构以铆头环接式为标准。
注：尺寸会有变化。根据要求提供合格尺寸。
1. Rivettd construction is standard.
Note: Dimensions subject to change. Certified dimensions furnished upon request.

单排滚子链额定功率
HORSEPOWER RATINGS SINGLE STRAND ROLLER CHAIN

小链轮齿数 No. of Teeth Small Spkt.	小链轮每分钟转数(rpm) REVOLUTIONS PER MINUTE-SMALL SPROCKET 10	25	50	100	200	300	400	500	700	900	1000	1200	1400	1600	1800	2100	2400	2700	3000	3500	4000	5000	6000	7000	8000
11	0.05	0.12	0.23	0.43	0.80	1.16	1.50	1.83	2.48	3.11	3.42	4.03	4.63	5.22	4.66	3.70	3.03	2.54	2.17	1.72	1.41	1.01	0.77	0.61	0.50
12	0.06	0.14	0.25	0.47	0.88	1.27	1.65	2.01	2.73	2.42	3.76	4.43	5.09	5.74	5.31	4.22	3.45	2.89	2.47	1.96	1.60	1.15	0.87	0.69	0.57
13	0.06	0.15	0.28	0.52	0.96	1.39	1.80	2.20	2.97	3.73	4.10	4.83	5.55	6.26	5.99	4.76	3.89	3.26	2.79	2.21	1.81	1.29	0.98	0.78	0.64
14	0.07	0.16	0.30	0.56	1.04	1.50	1.95	2.38	3.22	4.04	4.44	5.23	6.01	6.78	6.70	5.31	4.35	3.65	3.11	2.47	2.02	1.45	1.10	0.87	0.71
15	0.07	0.17	0.32	0.60	1.12	1.62	2.10	2.56	3.47	4.35	4.78	5.64	6.47	7.30	7.43	5.89	4.82	4.04	3.45	2.74	2.24	1.60	1.22	0.97	0.79
16	0.08	0.19	0.35	0.65	1.20	1.74	2.25	2.75	3.72	4.66	5.13	6.04	6.94	7.83	8.18	6.49	5.31	4.45	3.80	3.02	2.47	1.77	1.34	1.07	0.87
17	0.08	0.20	0.37	0.69	1.29	1.85	2.40	2.93	3.97	4.98	5.48	6.45	7.41	8.36	8.96	7.11	5.82	4.88	4.17	3.31	2.71	1.94	1.47	1.17	0.96
18	0.09	0.21	0.39	0.73	1.37	1.97	2.55	3.12	4.22	5.30	5.82	6.86	7.88	8.89	9.76	7.75	6.34	5.31	4.54	3.60	2.95	2.11	1.60	1.27	0
19	0.09	0.22	0.42	0.78	1.45	2.09	2.71	3.31	4.48	5.62	6.17	7.27	8.36	9.42	10.5	8.40	6.88	5.76	4.92	3.91	3.20	2.29	1.74	1.38	0
20	0.10	0.24	0.44	0.82	1.53	2.21	2.86	3.50	4.73	5.94	6.53	7.69	8.83	9.96	11.1	9.07	7.43	6.22	5.31	4.22	3.45	2.47	1.88	1.49	0
21	0.11	0.25	0.46	0.87	1.62	2.33	3.02	3.69	4.99	6.26	6.88	8.11	9.31	10.5	11.7	9.76	7.99	6.70	5.72	4.54	3.71	2.66	2.02	1.60	0
22	0.11	0.26	0.49	0.91	1.70	2.45	3.17	3.88	5.25	6.58	7.23	8.52	9.79	11.0	12.3	10.5	8.57	7.18	6.13	4.87	3.98	2.85	2.17	1.72	0
23	0.12	0.27	0.51	0.96	1.78	2.57	3.33	4.07	5.51	6.90	7.59	8.94	10.3	11.6	12.9	11.2	9.16	7.68	6.55	5.20	4.26	3.05	2.32	1.84	0
24	0.13	0.29	0.54	1.00	1.87	2.69	3.48	4.26	5.76	7.23	7.95	9.36	10.8	12.1	13.5	11.9	9.76	8.18	6.99	5.54	4.54	3.25	2.47	1.96	0
25	0.13	0.30	0.56	1.05	1.95	2.81	3.64	4.45	6.02	7.55	8.30	9.78	11.2	12.7	14.1	12.7	10.4	8.70	7.43	5.89	4.82	3.45	2.63	0	
26	0.14	0.31	0.58	1.09	2.04	2.93	3.80	4.64	6.28	7.88	8.66	10.2	11.7	13.2	14.7	13.5	11.0	9.23	7.88	6.25	5.12	3.66	2.79	0	
28	0.15	0.34	0.63	1.18	2.20	3.18	4.11	5.03	6.81	8.54	9.39	11.1	12.7	14.3	15.9	15.0	12.3	10.3	8.80	6.99	5.72	4.09	3.11	0	
30	0.16	0.37	0.68	1.27	2.38	3.42	4.43	5.42	7.33	9.20	10.1	11.9	13.7	15.4	17.2	16.7	13.6	11.4	9.76	7.75	6.34	4.54	3.45	0	
32	0.17	0.39	0.73	1.36	2.55	3.67	4.75	5.81	7.86	9.86	10.8	12.8	14.7	16.5	18.4	18.4	15.0	12.6	10.8	8.64	6.99	5.00	0		
35	0.19	0.43	0.81	1.50	2.81	4.04	5.24	6.40	8.66	10.9	11.9	14.1	16.2	18.2	20.3	21.0	17.2	14.4	12.3	9.76	7.99	5.72	0		
40	0.22	0.50	0.93	1.74	3.24	4.67	6.05	7.39	10.0	12.5	13.8	16.3	18.7	21.1	23.4	25.7	21.0	17.6	15.0	11.9	9.76	6.99	0		
润滑 Lubrication	I					II							III												

润滑方式见第19页
多排链的额定功率，用上述额定功率乘以第13页中的多排链系数得出。
注：尺寸会有变化。根据要求提供合格尺寸。
See page 19 for lubrication type.
For horsepower ratings of multiple strand, multiply the horsepower above by multiple strand factor on page 13.
Note: Dimensions subject to change. Certified dimensions furnished upon request.

OCM ANSI滚子链 ANSI ROLLER CHAIN

链号 Chain No. 50

节距 Pitch ● 0.625inch / 15.875mm

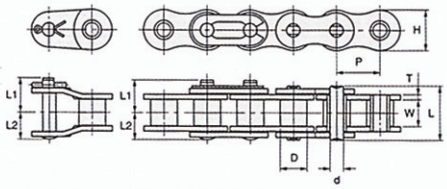

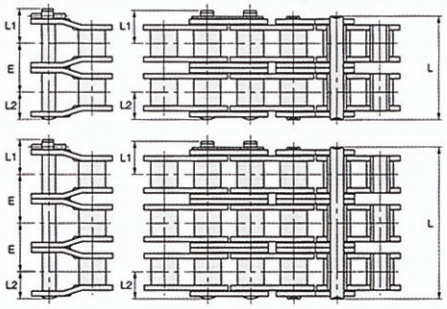

单位UNIT 上方Upper:inch
下方Beneath:mm

OCM 链号 Chain No.	ANSI 链号 ANSI No.	节距 Pitch P	滚子直径 Roller Diam. D	内节内宽 Width between L.P. W	链板 Link Plate H	链板 Link Plate T	销轴直径 Pin Diam. d	销轴 Pin L	销轴 Pin L1	销轴 Pin L2	排距 Trans Pitch E	平均抗拉强度 Average Tensile Strength Lb/kg	最大工作载荷 Max. Working Load Lb/kg	概略重量 Approx Weight Lb/ft kg/m
OCM50	50	0.625 15.875	0.400 10.16	0.376 9.55	0.591 15.0	0.079 2.0	0.200 5.08	0.800 20.3	0.477 12.1	0.410 10.4	0.713 18.1	7,166 3,250	1,389 630	0.713 1.08
OCM50-2	50-2	0.625 15.875	0.400 10.16	0.376 9.55	0.591 15.0	0.079 2.0	0.200 5.08	1.513 38.4	0.477 12.1	0.410 10.4	0.713 18.1	14,333 6,500	2,360 1,070	1.406 2.13
OCM50-3	50-3	0.625 15.875	0.400 10.16	0.376 9.55	0.591 15.0	0.079 2.0	0.200 5.08	2.230 56.6	0.477 12.1	0.410 10.4	0.713 18.1	21,499 9,750	3,462 1,570	2.099 3.18
OCM50-4	50-4	0.625 15.875	0.400 10.16	0.376 9.55	0.591 15.0	0.079 2.0	0.200 5.08	2.943 74.7	0.477 12.1	0.410 10.4	0.713 18.1	28,665 13,000	4,564 2,070	2.792 4.23
OCM50-5	50-5	0.625 15.875	0.400 10.16	0.376 9.55	0.591 15.0	0.079 2.0	0.200 5.08	3.656 92.8	0.477 12.1	0.410 10.4	0.713 18.1	35,831 16,250	5,402 2,450	3.485 5.28
OCM50-6	50-6	0.625 15.875	0.400 10.16	0.376 9.55	0.591 15.0	0.079 2.0	0.200 5.08	4.369 110.9	0.477 12.1	0.410 10.4	0.713 18.1	42,998 19,500	6,372 2,890	4.171 6.32

1. 销轴结构以铆头环接式为标准。
注:尺寸会有变化。根据要求提供合格尺寸。
1. Rivettd construction is standard.
Note: Dimensions subject to change. Certified dimensions furnished upon request.

单排滚子链额定功率
HORSEPOWER RATINGS SINGLE STRAND ROLLER CHAIN

小链轮齿数 No. of Teeth Small Spkt.	小链轮每分钟转数(rpm) REVOLUTIONS PER MINUTE-SMALL SPROCKET 10	25	50	100	200	300	400	500	700	900	1000	1200	1400	1600	1800	2100	2400	2700	3000	3500	4000	4500	5000	5500	6000
11	0.11	0.24	0.45	0.84	1.56	2.25	2.92	3.57	4.83	6.06	6.66	7.85	8.13	6.65	5.58	4.42	3.62	3.04	2.59	2.06	1.68	1.41	1.20	1.04	0.92
12	0.12	0.26	0.49	0.92	1.72	2.47	3.21	3.92	5.31	6.65	7.31	8.62	9.26	7.58	6.35	5.04	4.13	3.46	2.95	2.34	1.92	1.61	1.37	1.19	1.04
13	0.13	0.29	0.54	1.00	1.87	2.70	3.50	4.27	5.78	7.25	7.97	9.40	10.4	8.55	7.16	5.69	4.65	3.90	3.33	2.64	2.16	1.81	1.55	1.34	0
14	0.14	0.31	0.58	1.09	2.03	2.92	3.79	4.63	6.27	7.86	8.64	10.2	11.7	9.55	8.01	6.35	5.20	4.36	3.72	2.95	2.42	2.03	1.73	1.50	0
15	0.15	0.34	0.63	1.17	2.19	3.15	4.08	4.99	6.75	8.47	9.31	11.0	12.6	10.6	8.88	7.05	5.77	4.83	4.13	3.27	2.68	2.25	1.92	1.66	0
16	0.16	0.36	0.67	1.26	2.34	3.38	4.37	5.35	7.24	9.08	9.98	11.8	13.5	11.7	9.78	7.76	6.35	5.32	4.55	3.61	2.95	2.47	2.11	1.83	0
17	0.17	0.39	0.72	1.34	2.50	3.61	4.67	5.71	7.73	9.69	10.7	12.6	14.4	12.8	10.7	8.50	6.96	5.83	4.98	3.95	3.23	2.71	2.31	2.01	0
18	0.18	0.41	0.76	1.43	2.66	3.83	4.97	6.07	8.22	10.3	11.3	13.4	15.3	13.9	11.7	9.26	7.58	6.35	5.42	4.30	3.52	2.95	2.52	0	
19	0.19	0.43	0.81	1.51	2.82	4.07	5.27	6.44	8.72	10.9	12.0	14.2	16.3	15.1	12.7	10.0	8.22	6.89	5.88	4.67	3.82	3.20	2.73	0	
20	0.20	0.46	0.86	1.60	2.98	4.30	5.57	6.80	9.21	11.5	12.7	15.0	17.2	16.3	13.7	10.8	8.88	7.44	6.35	5.04	4.13	3.46	2.95	0	
21	0.21	0.48	0.90	1.69	3.14	4.53	5.87	7.17	9.71	12.2	13.4	15.8	18.1	17.6	14.7	11.7	9.55	8.01	6.84	5.42	4.44	3.72	3.18	0	
22	0.22	0.51	0.95	1.77	3.31	4.76	6.17	7.54	10.2	12.8	14.1	16.6	19.1	18.8	15.8	12.5	10.2	8.59	7.33	5.82	4.76	3.99	3.41	0	
23	0.23	0.53	1.00	1.86	3.47	5.00	6.47	7.91	10.7	13.4	14.8	17.4	20.0	20.1	16.9	13.4	11.0	9.18	7.84	6.22	5.09	4.27	0		
24	0.25	0.56	1.04	1.95	3.63	5.23	6.78	8.29	11.2	14.1	15.5	18.2	20.9	21.4	18.0	14.3	11.7	9.77	8.35	6.63	5.42	4.55	0		
25	0.26	0.58	1.09	2.03	3.80	5.47	7.08	8.66	11.7	14.7	16.2	19.0	21.9	22.8	19.1	15.2	12.4	10.4	8.88	7.05	5.77	4.83	0		
26	0.27	0.61	1.14	2.12	3.96	5.70	7.39	9.03	12.2	15.3	16.9	19.9	22.8	24.2	20.3	16.1	13.2	11.0	9.42	7.47	6.12	5.13	0		
28	0.29	0.66	1.23	2.30	4.29	6.18	8.01	9.79	13.2	16.6	18.3	21.5	24.7	27.0	22.6	18.0	14.7	12.3	10.5	8.35	6.84	5.73	0		
30	0.31	0.71	1.33	2.49	4.62	6.66	8.63	10.5	14.3	17.9	19.7	23.2	26.6	30.0	25.1	19.9	16.3	13.7	11.7	9.26	7.58	0			
32	0.33	0.76	1.42	2.66	4.96	7.14	9.25	11.3	15.3	19.2	21.1	24.9	28.6	32.2	27.7	22.0	18.0	15.1	12.9	10.2	8.35	0			
35	0.37	0.84	1.57	2.93	5.46	7.86	10.2	12.5	16.9	21.1	23.2	27.4	31.5	35.5	31.6	25.1	20.6	17.2	14.7	11.7	9.55	0			
40	0.43	0.97	1.81	3.38	6.31	9.08	11.8	14.4	19.5	24.4	26.8	31.6	36.3	41.0	38.7	30.7	25.1	21.0	18.0	14.3	0				
润滑 Lubrication	I				II				III																

润滑方式见第19页
多排链的额定功率，用上述额定功率乘以第13页中的多排链系数得出。
注:尺寸会有变化。根据要求提供合格尺寸。
See page 19 for lubrication type.
For horsepower ratings of multiple strand, multiply the horsepower above by multiple strand factor on page 13.
Note: Dimensions subject to change. Certified dimensions furnished upon request.

OCM ANSI滚子链 ANSI ROLLER CHAIN

链号 Chain No. 60

节距 Pitch ● 0.750inch / 19.05mm

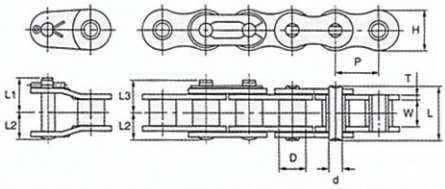

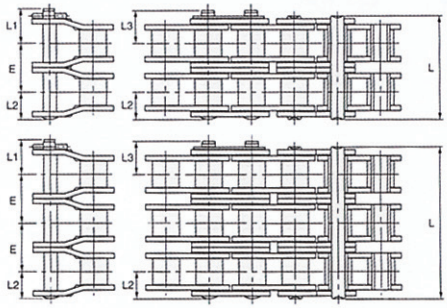

单位UNIT 上方Upper:inch
下方Beneath:mm

OCM 链号 Chain No.	ANSI 链号 ANSI No.	节距 Pitch P	滚子直径 Roller Diam. D	内节内宽 Width between L.P. W	链板 Link Plate H	链板 Link Plate T	销轴直径 Pin Diam. d	销轴 Pin L	销轴 Pin L1	销轴 Pin L2	销轴 Pin L3	排距 Trans Pitch E	平均抗拉强度 Average Tensile Strength Lb/kg	最大工作载荷 Max. Working Load Lb/kg	概略重量 Approx Weight Lb/ft kg/m
OCM60	60	0.750	0.469	0.500	0.709	0.095	0.234	1.001	0.599	0.500	0.579	0.898	9,923	2,095	1.067
		19.05	11.91	12.7	18.0	2.4	5.95	25.4	15.2	12.7	14.7	22.8	4,500	950	1.6
OCM60-2	60-2	0.750	0.469	0.500	0.709	0.095	0.234	1.899	0.599	0.500	0.579	0.898	19,845	3,550	2.068
		19.05	11.91	12.7	18.0	2.4	5.95	48.2	15.2	12.7	14.7	22.8	9,000	1,610	3.1
OCM60-3	60-3	0.750	0.469	0.500	0.709	0.095	0.234	2.801	0.599	0.500	0.579	0.898	29,768	5,226	3.068
		19.05	11.91	12.7	18.0	2.4	5.95	71.1	15.2	12.7	14.7	22.8	13,500	2,370	4.6
OCM60-4	60-4	0.750	0.469	0.500	0.709	0.095	0.234	3.700	0.599	0.500	0.579	0.898	39,690	6,902	4.135
		19.05	11.91	12.7	18.0	2.4	5.95	93.9	15.2	12.7	14.7	22.8	18,000	3,130	6.2
OCM60-5	60-5	0.750	0.469	0.500	0.709	0.095	0.234	4.598	0.599	0.500	0.579	0.898	49,613	8,159	5.136
		19.05	11.91	12.7	18.0	2.4	5.95	116.7	15.2	12.7	14.7	22.8	22,500	3,700	7.7
OCM60-6	60-6	0.750	0.469	0.500	0.709	0.095	0.234	5.496	0.599	0.500	0.579	0.898	59,535	9,636	6.136
		19.05	11.91	12.7	18.0	2.4	5.95	139.5	15.2	12.7	14.7	22.8	27,000	4,370	9.2

1. 销轴结构以铆头环接式为标准。
注：尺寸会有变化。根据要求提供合格尺寸。
1. Rivettd construction is standard.
Note: Dimensions subject to change. Certified dimensions furnished upon request.

单排滚子链额定功率
HORSEPOWER RATINGS SINGLE STRAND ROLLER CHAIN

小链轮齿数 No. of Teeth Small Spkt.	小链轮每分钟转数(rpm) REVOLUTIONS PER MINUTE-SMALL SPROCKET 10	25	50	100	150	200	300	400	500	600	700	800	900	1000	1100	1200	1400	1600	1800	2000	2500	3000	3500	4000	4500
11	0.18	0.41	0.77	1.44	2.07	2.69	3.87	5.02	6.13	7.23	8.30	9.36	10.4	11.4	12.5	11.9	9.41	7.70	6.45	5.51	3.94	3.00	2.38	1.95	1.63
12	0.20	0.45	0.85	1.58	2.28	2.95	4.25	5.51	6.74	7.94	9.12	10.3	11.4	12.6	13.7	13.5	10.7	8.77	7.35	6.28	4.49	3.42	2.71	2.22	1.86
13	0.22	0.50	0.92	1.73	2.49	3.22	4.64	6.01	7.34	8.65	9.94	11.2	12.5	13.7	14.9	15.2	12.1	9.89	8.29	7.08	5.06	3.85	3.06	2.50	0
14	0.24	0.54	1.00	1.87	2.69	3.49	5.02	6.51	7.96	9.37	10.8	12.1	13.5	14.8	16.2	17.0	13.5	11.1	9.26	7.91	5.66	4.31	3.42	2.80	0
15	0.25	0.58	1.08	2.01	2.90	3.76	5.41	7.01	8.57	10.1	11.6	13.1	14.5	16.0	17.4	18.8	15.0	12.3	10.3	8.77	6.28	4.77	3.79	3.10	0
16	0.27	0.62	1.16	2.16	3.11	4.03	5.80	7.52	9.19	10.8	12.4	14.0	15.6	17.1	18.7	20.2	16.5	13.5	11.3	9.66	6.91	5.26	4.17	3.42	0
17	0.29	0.66	1.24	2.31	3.32	4.30	6.20	8.03	9.81	11.6	13.3	15.0	16.7	18.3	19.9	21.6	18.1	14.8	12.4	10.6	7.57	5.76	4.57	3.74	0
18	0.31	0.70	1.31	2.45	3.53	4.58	6.59	8.54	10.4	12.3	14.1	15.9	17.7	19.5	21.2	22.9	19.7	16.1	13.5	11.5	8.25	6.28	4.98	4.08	0
19	0.33	0.75	1.39	2.60	3.74	4.85	6.99	9.05	11.1	13.0	15.0	16.9	18.8	20.6	22.5	24.3	21.4	17.5	14.6	12.5	8.95	6.81	5.40	4.42	0
20	0.35	0.79	1.47	2.75	3.96	5.13	7.38	9.57	11.7	13.8	15.8	17.9	19.8	21.8	23.8	25.7	23.1	18.9	15.8	13.5	9.66	7.35	5.83	0	
21	0.36	0.83	1.55	2.90	4.17	5.40	7.78	10.1	12.3	14.5	16.7	18.8	20.9	23.0	25.1	27.1	24.8	20.3	17.0	14.5	10.4	7.91	6.28	0	
22	0.38	0.87	1.63	3.05	4.39	5.68	8.19	10.6	13.0	15.3	17.5	19.8	22.0	24.2	26.4	28.5	26.6	21.8	18.2	15.6	11.1	8.48	6.73	0	
23	0.40	0.92	1.71	3.19	4.60	5.96	8.59	11.1	13.6	16.0	18.4	20.8	23.1	25.4	27.7	29.9	28.4	23.3	19.5	16.7	11.9	9.07	7.19	0	
24	0.42	0.96	1.79	3.35	4.82	6.24	8.99	11.6	14.2	16.8	19.3	21.7	24.2	26.6	29.0	31.3	30.3	24.8	20.8	17.8	12.7	9.66	7.67	0	
25	0.44	1.00	1.87	3.50	5.04	6.52	9.40	12.2	14.9	17.5	20.1	22.7	25.3	27.8	30.3	32.7	32.2	26.4	22.1	18.9	13.5	10.3	8.15	0	
26	0.46	1.05	1.95	3.65	5.25	6.81	9.80	12.7	15.5	18.3	21.0	23.7	26.4	29.0	31.6	34.1	34.2	28.0	23.4	20.0	14.3	10.9	8.65	0	
28	0.50	1.13	2.12	3.95	5.69	7.37	10.6	13.8	16.8	19.8	22.8	25.7	28.5	31.4	34.2	37.0	38.2	31.3	26.2	22.4	16.0	12.2	0		
30	0.54	1.22	2.28	4.26	6.13	7.94	11.4	14.8	18.1	21.4	24.5	27.7	30.8	33.8	36.8	39.8	42.4	34.7	29.1	24.8	17.8	13.5	0		
32	0.57	1.31	2.45	4.56	6.57	8.52	12.3	15.9	19.4	22.9	26.3	29.7	33.0	36.3	39.5	42.7	46.7	38.2	32.0	27.3	19.6	14.9	0		
35	0.63	1.44	2.69	5.03	7.24	9.38	13.5	17.5	21.4	25.2	29.0	32.7	36.3	39.9	43.5	47.1	53.4	43.7	36.6	31.3	22.4	17.0	0		
40	0.73	1.67	3.11	5.81	8.37	10.8	15.6	20.2	24.7	29.1	33.5	37.7	42.0	46.1	50.3	54.4	62.5	53.4	44.7	38.2	27.3	0			
润滑 Lubrication	I						II												III						

润滑方式见第19页
多排链的额定功率，用上述额定功率乘以第13页中的多排链系数得出。
注：尺寸会有变化。根据要求提供合格尺寸。
See page 19 for lubrication type.
For horsepower ratings of multiple strand, multiply the horsepower above by multiple strand factor on page 13.
Note: Dimensions subject to change. Certified dimensions furnished upon request.

OCM ANSI滚子链 ANSI ROLLER CHAIN

链号 Chain No. 80

节距 Pitch ● 1.000inch / 25.40mm

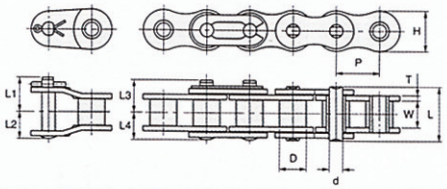

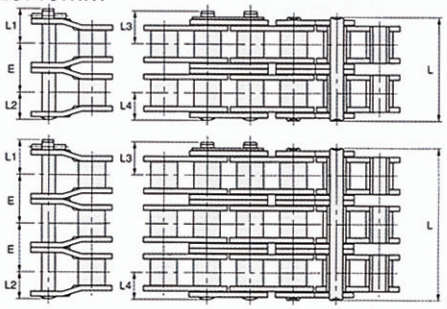

单位UNIT 上方Upper:inch
下方Beneath:mm

OCM 链号 Chain No.	ANSI 链号 ANSI No.	节距 Pitch P	滚子直径 Roller Diam. D	内节内宽 Width between L.P. W	链板 Link Plate H	链板 Link Plate T	销轴直径 Pin Diam. d	销轴 Pin L	销轴 Pin L1	销轴 Pin L2	销轴 Pin L3	销轴 Pin L4	排距 Trans Pitch E	平均抗拉强度 Average Tensile Strength Lb/kg	最大工作载荷 Max. Working Load Lb/kg	概略重量 Approx Weight Lb/ft kg/m
OCM80	80	1.000	0.625	0.627	0.949	0.126	0.313	1.289	0.776	0.709	0.741	0.643	1.155	17,640	3,638	1.868
		25.40	15.88	15.9	24.1	3.2	7.94	32.7	19.7	18.0	18.8	16.3	29.3	8,000	1,650	2.8
OCM80-2	80-2	1.000	0.625	0.627	0.949	0.126	0.313	2.447	0.776	0.709	0.741	0.643	1.155	35,280	6,185	3.735
		25.40	15.88	15.9	24.1	3.2	7.94	62.1	19.7	18.0	18.8	16.3	29.3	16,000	2,805	5.6
OCM80-3	80-3	1.000	0.625	0.627	0.949	0.126	0.313	3.602	0.776	0.709	0.741	0.643	1.155	52,920	9,096	5.536
		25.40	15.88	15.9	24.1	3.2	7.94	91.4	19.7	18.0	18.8	16.3	29.3	24,000	4,125	8.3
OCM80-4	80-4	1.000	0.625	0.627	0.949	0.126	0.313	4.756	0.776	0.709	0.741	0.643	1.155	70,560	12,006	7.337
		25.40	15.88	15.9	24.1	3.2	7.94	120.7	19.7	18.0	18.8	16.3	29.3	32,000	5,445	11.0
OCM80-5	80-5	1.000	0.625	0.627	0.949	0.126	0.313	5.910	0.776	0.709	0.741	0.643	1.155	88,200	14,189	9.138
		25.40	15.88	15.9	24.1	3.2	7.94	150.0	19.7	18.0	18.8	16.3	29.3	40,000	6,435	13.7
OCM80-6	80-6	1.000	0.625	0.627	0.949	0.126	0.313	7.065	0.776	0.709	0.741	0.643	1.155	105,840	16,736	10.939
		25.40	15.88	15.9	24.1	3.2	7.94	179.3	19.7	18.0	18.8	16.3	29.3	48,000	7,590	16.4

1. 销轴结构以铆头环接式为标准。 注：尺寸会有变化。根据要求提供合格尺寸。1. Rivettd construction is standard. Note: Dimensions subject to change. Certified dimensions furnished upon request.

单排滚子链额定功率
HORSEPOWER RATINGS SINGLE STRAND ROLLER CHAIN

小链轮齿数 No. of Teeth Small Spkt.	小链轮每分钟转数(rpm) REVOLUTIONS PER MINUTE-SMALL SPROCKET 10	25	50	100	150	200	300	400	500	600	700	800	900	1000	1100	1200	1400	1600	1800	2000	2200	2400	2700	3000	3400
11	0.42	0.97	1.80	3.36	4.84	6.28	9.04	11.7	14.3	16.9	19.4	21.9	23.0	19.6	17.0	14.9	11.8	9.69	8.12	6.93	6.01	5.27	4.42	3.77	1.70
12	0.47	1.06	1.98	3.69	5.32	6.89	9.93	12.9	15.7	18.5	21.3	24.0	26.2	22.3	19.4	17.0	13.5	11.0	9.25	7.90	6.85	6.01	5.04	4.30	0
13	0.51	1.16	2.16	4.03	5.80	7.52	10.8	14.0	17.1	20.2	23.2	26.2	29.1	25.2	21.8	19.2	15.2	12.5	10.4	8.91	7.72	6.78	5.68	4.85	0
14	0.55	1.25	2.34	4.36	6.29	8.14	11.7	15.2	18.6	21.9	25.1	28.4	31.5	28.2	24.4	21.4	17.0	13.9	11.7	9.96	8.63	7.57	6.35	5.42	0
15	0.59	1.35	2.52	4.70	6.77	8.77	12.6	16.4	20.0	23.6	27.1	30.6	34.0	31.2	27.1	23.8	18.9	15.4	12.9	11.0	9.57	8.40	7.04	6.01	0
16	0.63	1.45	2.70	5.04	7.26	9.41	13.5	17.6	21.5	25.3	29.0	32.8	36.4	34.4	29.8	26.2	20.8	17.0	14.2	12.2	10.5	9.25	7.76	6.62	0
17	0.68	1.55	2.88	5.38	7.75	10.0	14.5	18.7	22.9	27.0	31.0	35.0	38.9	37.7	32.7	28.7	22.7	18.6	15.6	13.3	11.5	10.1	8.49	7.25	0
18	0.72	1.64	3.07	5.72	8.25	10.7	15.4	19.9	24.4	28.7	33.0	37.2	41.4	41.1	35.6	31.2	24.8	20.3	17.0	14.5	12.6	11.0	9.25	7.90	0
19	0.76	1.74	3.25	6.07	8.74	11.3	16.3	21.1	25.8	30.4	35.0	39.4	43.8	44.5	38.6	33.9	26.9	22.0	18.4	15.7	13.6	12.0	10.0	8.57	0
20	0.81	1.84	3.44	6.41	9.24	12.0	17.2	22.3	27.3	32.2	37.0	41.7	46.3	48.1	41.7	36.6	29.0	23.8	19.9	17.0	14.7	12.9	10.8	0	0
21	0.85	1.94	3.62	6.76	9.74	12.6	18.2	23.5	28.8	33.9	39.0	43.9	48.9	51.7	44.8	39.4	31.2	25.6	21.4	18.3	15.9	13.9	11.7	0	0
22	0.90	2.04	3.81	7.11	10.2	13.3	19.1	24.8	30.3	35.7	41.0	46.2	51.4	55.5	48.1	42.2	33.5	27.4	23.0	19.6	17.0	14.9	12.5	0	0
23	0.94	2.14	4.00	7.46	10.7	13.9	20.1	26.0	31.8	37.4	43.0	48.5	53.9	59.3	51.4	45.1	35.8	29.3	24.6	21.0	18.2	15.9	13.4	0	
24	0.98	2.24	4.19	7.81	11.3	14.6	21.0	27.2	33.2	39.2	45.0	50.8	56.4	62.0	54.8	48.1	38.2	31.2	26.2	22.3	19.4	17.0	14.2	0	
25	1.03	2.34	4.37	8.16	11.8	15.2	21.9	28.4	34.7	40.9	47.0	53.0	59.0	64.8	58.2	51.1	40.6	33.2	27.8	23.8	20.6	18.1	15.1	0	
26	1.07	2.45	4.56	8.52	12.3	15.9	22.9	29.7	36.2	42.7	49.1	55.3	61.5	67.6	61.8	54.2	43.0	35.2	29.5	25.2	21.8	19.2	16.1	0	
28	1.16	2.65	4.94	9.23	13.3	17.2	24.8	32.1	39.3	46.3	53.2	59.9	66.7	73.3	69.0	60.6	48.1	39.4	33.0	28.2	24.4	21.4	0		
30	1.25	2.85	5.33	9.94	14.3	18.5	26.7	34.6	42.3	49.9	57.3	64.6	71.8	78.9	76.6	67.2	53.3	43.6	36.6	31.2	27.1	23.8	0		
32	1.34	3.06	5.71	10.7	15.3	19.9	28.6	37.1	45.4	53.5	61.4	69.2	77.0	84.6	84.3	74.0	58.7	48.1	40.3	34.4	29.8	26.2	0		
35	1.48	3.37	6.29	11.7	16.9	21.9	31.6	40.9	50.0	58.9	67.6	76.3	84.8	93.3	96.5	84.7	67.2	55.0	46.1	39.4	34.1	0			
40	1.71	3.89	7.27	13.6	19.5	25.3	36.4	47.2	57.7	68.0	78.1	88.1	98.0	108	117	103	82.1	67.2	56.3	48.1	20.0	0			
润滑 Lubrication	I					II										III									

润滑方式见第19页
若选择虚线右侧部分，请咨询OCM。
多排链的额定功率，用上述额定功率乘以第13页中的多排链系数得出。
注：尺寸会有变化。根据要求提供合格尺寸。
See page 19 for lubrication type.
When your selection fall in the right part of the dotted line, consult us.
For horsepower ratings of multiple strand, multiply the horsepower above by multiple strand factor on page 13.
Note: Dimensions subject to change. Certified dimensions furnished upon request.

OCM ANSI滚子链 ANSI ROLLER CHAIN

链号 Chain No. 100 节距 Pitch ● 1.250inch / 31.75mm

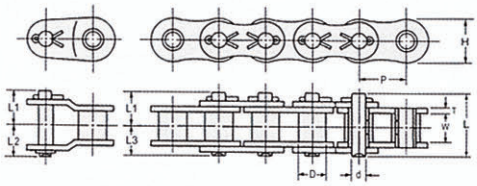

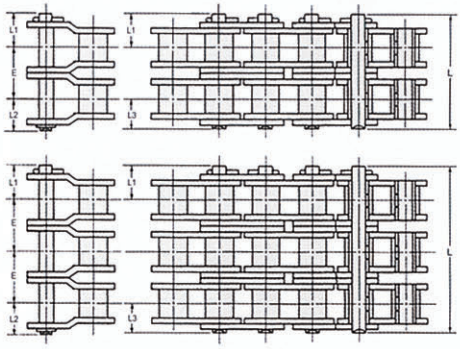

单位UNIT 上方Upper:inch
下方Beneath:mm

OCM 链号 Chain No.	ANSI 链号 ANSI No.	节距 Pitch P	滚子直径 Roller Diam. D	内节内宽 Width between L.P. W	链板 Link Plate H	链板 Link Plate T	销轴直径 Pin Diam. d	销轴 Pin L	销轴 Pin L1	销轴 Pin L2	销轴 Pin L3	排距 Trans Pitch E	平均抗拉强度 Average Tensile Strength Lb/kg	最大工作载荷 Max. Working Load Lb/kg	概略重量 Approx Weight Lb/ft kg/m
OCM100	100	1.250	0.750	0.755	1.185	0.158	0.375	1.698	0.925	0.846	0.787	1.411	26,460	5,513	2.801
		31.75	19.05	19.15	30.1	4.0	9.53	43.1	23.5	21.5	20.0	35.8	12,000	2,500	4.2
OCM100-2	100-2	1.250	0.750	0.755	1.185	0.158	0.375	3.109	0.925	0.846	0.787	1.411	52,920	9,371	5.603
		31.75	19.05	19.15	30.1	4.0	9.53	78.9	23.5	21.5	20.0	35.8	24,000	4,250	8.4
OCM100-3	100-3	1.250	0.750	0.755	1.185	0.158	0.375	4.519	0.925	0.846	0.787	1.411	79,380	13,781	8.338
		31.75	19.05	19.15	30.1	4.0	9.53	114.7	23.5	21.5	20.0	35.8	36,000	6,250	12.5
OCM100-4	100-4	1.250	0.750	0.755	1.185	0.158	0.375	5.930	0.925	0.846	0.787	1.411	105,840	18,191	11.006
		31.75	19.05	19.15	30.1	4.0	9.53	150.5	23.5	21.5	20.0	35.8	48,000	8,250	16.5
OCM100-5	100-5	1.250	0.750	0.755	1.185	0.158	0.375	7.340	0.925	0.846	0.787	1.411	132,300	21,499	13.807
		31.75	19.05	19.15	30.1	4.0	9.53	186.3	23.5	21.5	20.0	35.8	60,000	9,750	20.7
OCM100-6	100-6	1.250	0.750	0.755	1.185	0.158	0.375	8.751	0.925	0.846	0.787	1.411	158,760	25,358	16.542
		31.75	19.05	19.15	30.1	4.0	9.53	222.1	23.5	21.5	20.0	35.8	72,000	11,500	24.8

注:尺寸会有变化。根据要求提供合格尺寸。Note: Dimensions subject to change. Certified dimensions furnished upon request.

单排滚子链额定功率
HORSEPOWER RATINGS SINGLE STRAND ROLLER CHAIN

小链轮齿数 No. of Teeth Small Spkt.	小链轮每分钟转数(rpm) REVOLUTIONS PER MINUTE-SMALL SPROCKET 10	25	50	100	150	200	300	400	500	600	700	800	900	1000	1100	1200	1300	1400	1600	1800	2000	2200	2400	2600	2700
11	0.81	1.85	3.45	6.44	9.28	12.0	17.3	22.4	27.4	32.3	37.1	32.8	27.5	23.4	20.3	17.8	15.8	14.2	11.6	9.71	8.29	7.19	6.31	1.29	0
12	0.89	2.03	3.79	7.08	10.2	13.2	19.0	24.6	30.1	35.5	40.8	37.3	31.3	26.7	23.2	20.3	18.0	16.1	13.2	11.1	9.45	8.19	7.19	0	
13	0.97	2.22	4.13	7.72	11.1	14.4	20.7	26.9	32.8	38.7	44.5	42.1	35.3	30.1	26.1	22.9	20.3	18.2	14.9	12.5	10.6	9.23	8.10	0	
14	1.05	2.40	4.48	8.36	12.0	15.6	22.5	29.1	35.6	41.9	48.2	47.0	39.4	33.7	29.2	25.6	22.7	20.3	16.6	13.9	11.9	10.3	9.05	0	
15	1.13	2.59	4.83	9.01	13.0	16.8	24.2	31.4	38.3	45.2	51.9	52.2	43.7	37.3	32.4	28.4	25.2	22.5	18.4	15.5	13.2	11.4	10.0	0	
16	1.22	2.77	5.17	9.66	13.9	18.0	26.0	33.6	41.1	48.4	55.6	57.5	48.2	41.1	35.7	31.3	27.7	24.8	20.3	17.0	14.5	12.6	11.1	0	
17	1.30	2.96	5.52	10.3	14.8	19.2	27.7	35.9	43.9	51.7	59.4	63.0	52.8	45.0	39.0	34.3	30.4	27.2	22.3	18.7	15.9	13.8	0.79	0	
18	1.38	3.15	5.88	11.0	15.8	20.5	29.5	38.2	46.7	55.0	63.2	68.6	57.5	49.1	42.5	37.3	33.1	29.6	24.2	20.3	17.4	15.0	0		
19	1.46	3.34	6.23	11.6	16.7	21.7	31.2	40.5	49.5	58.3	67.0	74.4	62.2	53.2	46.1	40.5	35.9	32.1	26.3	22.0	18.8	16.3	0		
20	1.55	3.53	6.58	12.3	17.7	22.9	33.0	42.8	52.3	61.6	70.8	79.8	67.3	57.5	49.8	43.7	38.8	34.7	28.4	23.8	20.3	17.6	0		
21	1.63	3.72	6.94	13.0	18.7	24.2	34.8	45.1	55.1	65.0	74.6	84.2	72.4	61.8	53.6	47.0	41.7	37.3	30.6	25.6	21.9	19.0	0		
22	1.71	3.91	7.30	13.6	19.6	25.4	36.6	47.4	58.0	68.3	78.5	88.5	77.7	66.3	57.5	50.4	44.7	40.0	32.8	27.5	23.4	20.3	0		
23	1.80	4.10	7.66	14.3	20.6	26.7	38.4	49.8	60.8	71.7	82.3	92.8	83.0	70.9	61.4	53.9	47.8	42.8	35.0	29.4	25.1	7.74	0		
24	1.88	4.30	8.02	15.0	21.5	27.9	40.2	52.1	63.7	75.0	86.2	97.2	88.5	75.6	65.5	57.5	51.0	45.6	37.3	31.3	26.7	0			
25	1.97	4.49	8.38	15.6	22.5	29.2	42.0	54.4	66.6	78.4	90.1	102	94.1	80.3	69.6	61.1	54.2	48.5	39.7	33.3	28.4	0			
26	2.05	4.68	8.74	16.3	23.5	30.4	43.8	56.8	69.4	81.8	94.0	106	99.8	85.2	73.8	64.8	57.5	51.4	42.1	35.3	30.1	0			
28	2.22	5.07	9.47	17.7	25.5	33.0	47.5	61.5	75.2	88.6	102	115	112	95.2	82.5	72.4	64.2	57.5	47.0	39.4	33.7	0			
30	2.40	5.47	10.2	19.0	27.4	35.5	51.2	66.3	81.0	95.5	110	124	124	106	91.5	80.3	71.2	63.7	52.2	43.7	10.0	0			
32	2.57	5.86	10.9	20.4	29.4	38.1	54.9	71.1	86.9	102	118	133	136	116	101	88.5	78.5	70.2	57.5	48.2	0				
35	2.83	6.46	12.0	22.5	32.4	42.0	60.4	78.3	95.7	113	130	146	156	133	115	101	89.8	80.3	65.8	55.1	0				
40	3.27	7.46	13.9	26.0	37.4	48.5	69.8	90.4	111	130	150	169	188	163	141	124	110	98.1	80.3	0					
润滑 Lubrication	I			II				III																	

润滑方式见第19页
若选择虚线右侧部分，请咨询OCM。
多排链的额定功率，用上述额定功率乘以第13页中的多排链系数得出。
注:尺寸会有变化。根据要求提供合格尺寸。
See page 19 for lubrication type.
When your selection fall in the right part of the dotted line, consult us.
For horsepower ratings of multiple strand, multiply the horsepower above by multiple strand factor on page 13.
Note: Dimensions subject to change. Certified dimensions furnished upon request.

OCM ANSI滚子链 ANSI ROLLER CHAIN

链号 Chain No. 120 节距 Pitch ● 1.500inch / 38.10mm

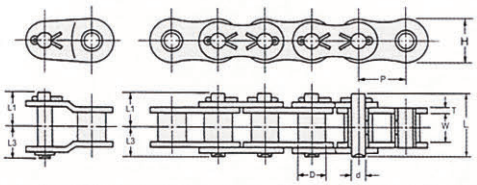

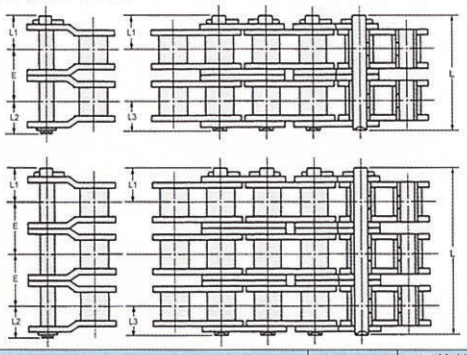

单位UNIT 上方Upper:inch
下方Beneath:mm

OCM 链号 Chain No.	ANSI 链号 ANSI No.	节距 Pitch P	滚子直径 Roller Diam. D	内节内宽 Width between L.P. W	链板 Link Plate H	链板 Link Plate T	销轴直径 Pin Diam. d	销轴 Pin L	销轴 Pin L1	销轴 Pin L2	销轴 Pin L3	排距 Trans Pitch E	平均抗拉强度 Average Tensile Strength Lb/kg	最大工作载荷 Max. Working Load Lb/kg	概略重量 Approx Weight Lb/ft kg/m
OCM120	120	1.500	0.876	1.007	1.425	0.189	0.438	2.124	1.119	1.071	0.989	1.789	37,044	7,277	4.135
		38.10	22.23	25.55	36.2	4.8	11.11	53.9	28.4	27.2	25.1	45.4	16,800	3,300	6.2
OCM120-2	120-2	1.500	0.876	1.007	1.425	0.189	0.438	3.897	1.119	1.071	0.989	1.789	74,088	12,370	8.137
		38.10	22.23	25.55	36.2	4.8	11.11	98.9	28.4	27.2	25.1	45.4	33,600	5,610	12.2
OCM120-3	120-3	1.500	0.876	1.007	1.425	0.189	0.438	5.685	1.119	1.071	0.989	1.789	111,132	18,191	12.206
		38.10	22.23	25.55	36.2	4.8	11.11	144.3	28.4	27.2	25.1	45.4	50,400	8,250	18.3
OCM120-4	120-4	1.500	0.876	1.007	1.425	0.189	0.438	7.474	1.119	1.071	0.989	1.789	148,176	24,012	16.342
		38.10	22.23	25.55	36.2	4.8	11.11	189.7	28.4	27.2	25.1	45.4	67,200	10,890	24.5
OCM120-5	120-5	1.500	0.876	1.007	1.425	0.189	0.438	9.263	1.119	1.071	0.989	1.789	185,220	28,378	20.410
		38.10	22.23	25.55	36.2	4.8	11.11	235.1	28.4	27.2	25.1	45.4	84,000	12,870	30.6
OCM120-6	120-6	1.500	0.876	1.007	1.425	0.189	0.438	11.052	1.119	1.071	0.989	1.789	222,264	33,472	24.546
		38.10	22.23	25.55	36.2	4.8	11.11	280.5	28.4	27.2	25.1	45.4	100,800	15,180	36.8

注：尺寸会有变化。根据要求提供合格尺寸。Note: Dimensions subject to change. Certified dimensions furnished upon request.

单排滚子链额定功率
HORSEPOWER RATINGS SINGLE STRAND ROLLER CHAIN

小链轮齿数 No. of Teeth Small Spkt.	小链轮每分钟转数(rpm) REVOLUTIONS PER MINUTE-SMALL SPROCKET 10	25	50	100	150	200	300	400	500	600	700	800	900	1000	1100	1200	1300	1400	1500	1600	1700	1800	1900	2000	2100
11	1.37	3.12	5.83	10.9	15.7	20.3	29.2	37.9	46.3	54.6	46.3	37.9	31.8	27.1	23.5	20.6	18.3	16.4	14.8	13.4	12.2	11.2	10.4	9.59	0
12	1.50	3.43	6.40	11.9	17.2	22.3	32.1	41.6	50.9	59.9	52.8	43.2	36.2	30.9	26.8	23.5	20.9	18.7	16.8	15.3	13.9	12.8	11.8	10.9	0
13	1.64	3.74	6.98	13.0	18.8	24.3	35.0	45.4	55.5	65.3	59.5	48.7	40.8	34.9	30.2	26.5	23.5	21.0	19.0	17.2	15.7	14.4	13.3	12.3	0
14	1.78	4.05	7.56	14.1	20.3	26.3	37.9	49.1	60.1	70.8	66.5	54.4	45.6	39.0	33.8	29.6	26.3	23.5	21.2	19.2	17.6	16.1	14.9	8.94	0
15	1.91	4.37	8.15	15.2	21.9	28.4	40.9	53.0	64.7	76.3	73.8	60.4	50.6	43.2	37.4	32.9	29.1	26.1	23.5	21.3	19.5	17.0	16.5	0	
16	2.05	4.68	8.74	16.3	23.5	30.4	43.8	56.8	69.4	81.8	81.3	66.5	55.7	47.6	41.2	36.2	32.1	28.7	25.9	23.5	21.5	19.7	18.2	0	
17	2.19	5.00	9.33	17.4	25.1	32.5	46.8	60.6	74.1	87.3	89.0	72.8	61.0	52.1	45.2	39.6	35.2	31.5	28.4	25.8	23.5	21.6	19.9	0	
18	2.33	5.32	9.92	18.5	26.7	34.6	49.8	64.5	78.8	92.9	97.0	79.4	66.5	56.8	49.2	43.2	38.3	34.3	30.9	28.1	25.6	23.5	11.3	0	
19	2.47	5.64	10.5	19.6	28.3	36.6	52.8	68.4	83.6	98.5	105	86.1	72.1	61.6	53.4	46.8	41.5	37.2	33.5	30.4	27.8	25.5	0		
20	2.61	5.96	11.1	20.7	29.9	38.7	55.8	72.2	88.3	104	114	92.9	77.9	66.5	57.6	50.6	44.9	40.1	36.2	32.9	30.0	27.5	0		
21	2.75	6.28	11.7	21.9	31.5	40.8	58.8	76.2	93.1	110	122	100	83.8	71.6	62.0	54.4	48.3	43.2	39.0	35.4	32.3	29.6	0		
22	2.90	6.60	12.3	23.0	33.1	42.9	61.8	80.1	97.9	115	131	107	89.9	76.7	66.5	58.4	51.8	46.3	41.8	37.9	34.6	16.6	0		
23	3.04	6.93	12.9	24.1	34.8	45.0	64.9	84.0	103	121	139	115	96.1	82.0	71.1	62.4	55.3	49.5	44.6	40.5	37.0	0			
24	3.18	7.25	13.5	25.3	36.4	47.1	67.9	88.0	108	127	146	122	102	87.4	75.8	66.5	59.0	52.8	47.6	43.2	39.4	0			
25	3.32	7.58	14.1	26.4	38.0	49.3	71.0	91.9	112	132	152	130	109	92.9	80.6	70.7	62.7	56.1	50.6	45.9	41.3	0			
26	3.47	7.91	14.8	27.5	39.7	51.4	74.0	95.9	117	138	159	138	115	98.6	85.4	75.0	66.5	59.5	53.7	48.7	26.6	0			
28	3.76	8.57	16.0	29.8	43.0	55.7	80.2	104	127	150	172	154	129	110	95.5	83.8	74.3	66.5	60.0	54.4	0				
30	4.05	9.23	17.2	32.1	46.3	60.0	86.4	112	137	161	185	171	143	122	106	92.9	82.4	73.8	66.5	42.4	0				
32	4.34	9.90	18.5	34.5	49.6	64.3	92.6	120	147	173	199	188	158	135	117	102	90.8	81.3	73.3	0					
35	4.78	10.9	20.3	38.0	54.7	70.9	102	132	162	190	219	215	180	154	133	117	104	92.9	47.7	0					
40	5.52	12.6	23.5	43.9	63.2	81.8	118	153	187	220	253	263	220	188	163	143	127	59.5	0						
润滑 Lubrication	I			II											III										

润滑方式见第19页
若选择虚线右侧部分，请咨询OCM。
多排链的额定功率，用上述额定功率乘以第13页中的多排链系数得出。
注：尺寸会有变化。根据要求提供合格尺寸。
See page 19 for lubrication type.
When your selection fall in the right part of the dotted line, consult us.
For horsepower ratings of multiple strand, multiply the horsepower above by multiple strand factor on page 13.
Note: Dimensions subject to change. Certified dimensions furnished upon request.

OCM ANSI滚子链 ANSI ROLLER CHAIN

链号 Chain No. 140 节距 Pitch ● 1.750inch / 44.45mm

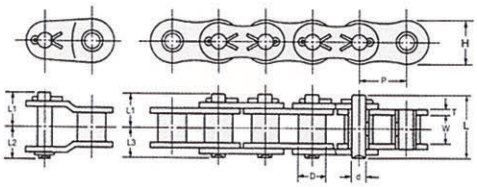

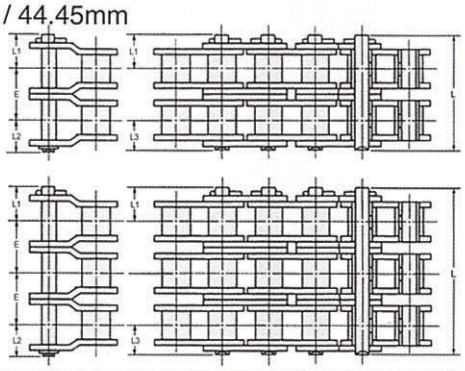

单位UNIT 上方Upper:inch
下方Beneath:mm

OCM 链号 Chain No.	ANSI 链号 ANSI No.	节距 Pitch P	滚子直径 Roller Diam. D	内节内宽 Width between L.P. W	链板 Link Plate H	链板 Link Plate T	销轴直径 Pin Diam. d	销轴 Pin L	销轴 Pin L1	销轴 Pin L2	销轴 Pin L3	排距 Trans Pitch E	平均抗拉强度 Average Tensile Strength Lb/kg	最大工作载荷 Max. Working Load Lb/kg	概略重量 Approx Weight Lb/ft kg/m
OCM140	140	1.750	1.000	1.000	1.663	0.220	0.500	2.321	1.253	1.150	1.068	1.927	48,731	9,702	5.136
		44.45	25.40	25.40	42.2	5.6	12.70	58.9	31.8	29.2	27.1	48.9	22,100	4,400	7.7
OCM140-2	140-2	1.750	1.000	1.000	1.663	0.220	0.500	4.247	1.253	1.150	1.068	1.927	97,461	16,493	10.072
		44.45	25.40	25.40	42.2	5.6	12.70	107.8	31.8	29.2	27.1	48.9	44,200	7,480	15.1
OCM140-3	140-3	1.750	1.000	1.000	1.663	0.220	0.500	6.174	1.253	1.150	1.068	1.927	146,192	24,255	15.074
		44.45	25.40	25.40	42.2	5.6	12.70	156.7	31.8	29.2	27.1	48.9	66,300	11,000	22.6
OCM140-4	140-4	1.750	1.000	1.000	1.663	0.220	0.500	8.101	1.253	1.150	1.068	1.927	194,922	32,017	20.077
		44.45	25.40	25.40	42.2	5.6	12.70	205.6	31.8	29.2	27.1	48.9	88,400	14,520	30.1
OCM140-5	140-5	1.750	1.000	1.000	1.663	0.220	0.500	10.027	1.253	1.150	1.068	1.927	243,653	37,838	25.013
		44.45	25.40	25.40	42.2	5.6	12.70	254.5	31.8	29.2	27.1	48.9	110,500	17,160	37.5
OCM140-6	140-6	1.750	1.000	1.000	1.663	0.220	0.500	11.954	1.253	1.150	1.068	1.927	292,383	44,629	30.015
		44.45	25.40	25.40	42.2	5.6	12.70	303.4	31.8	29.2	27.1	48.9	132,600	20,240	45.0

注:尺寸会有变化。根据要求提供合格尺寸。Note: Dimensions subject to change. Certified dimensions furnished upon request.

单排滚子链额定功率
HORSEPOWER RATINGS SINGLE STRAND ROLLER CHAIN

小链轮齿数 No. of Teeth Small Spkt.	小链轮每分钟转数(rpm) REVOLUTIONS PER MINUTE-SMALL SPROCKET 10	25	50	100	150	200	250	300	350	400	450	500	550	600	700	800	900	1000	1100	1200	1300	1400	1500	1600	1700
11	2.12	4.83	9.02	16.8	24.2	31.4	38.4	45.2	52.0	58.6	65.2	71.6	75.2	66.0	52.4	42.9	35.9	30.7	26.6	23.3	20.7	18.5	16.7	15.2	0
12	2.33	5.31	9.91	18.5	26.6	34.5	42.2	49.7	57.1	64.4	71.6	78.7	85.7	75.2	59.7	48.9	41.0	35.0	30.3	26.6	23.6	21.1	19.0	17.3	0
13	2.54	5.79	10.8	20.2	29.0	37.6	46.0	54.2	62.2	70.2	78.0	85.8	93.5	84.8	67.3	55.1	46.2	39.4	34.2	30.0	26.5	23.8	21.5	19.5	0
14	2.75	6.27	11.7	21.8	31.5	40.8	49.8	58.7	67.4	76.0	84.5	93.0	101	94.8	75.2	61.6	51.6	44.1	38.2	33.5	29.7	26.6	24.0	21.8	0
15	2.96	6.76	12.6	23.5	33.9	43.9	53.7	63.2	72.7	81.9	91.1	100	109	105	83.4	68.3	57.2	48.9	42.4	37.2	33.0	29.5	26.6	0	
16	3.18	7.24	13.5	25.2	36.3	47.1	57.5	67.8	77.9	87.8	97.7	107	117	116	91.9	75.2	63.1	53.8	46.7	41.0	36.3	32.5	29.3	0	
17	3.39	7.73	14.4	26.9	38.8	50.3	61.4	72.4	83.2	93.8	104	115	125	127	101	82.4	69.1	59.0	51.1	44.9	39.8	35.6	32.1	0	
18	3.61	8.23	15.4	28.6	41.3	53.5	65.3	77.0	88.5	99.8	111	122	133	138	110	89.8	75.2	64.2	55.7	48.9	43.3	38.8	35.0	0	
19	3.82	8.72	16.3	30.4	43.7	56.7	60.3	81.6	93.8	106	118	129	141	150	119	97.4	81.6	69.7	60.4	53.0	47.0	42.1	37.9	0	
20	4.04	9.22	17.2	32.1	46.2	59.9	73.2	86.3	99.1	112	124	137	149	161	128	105	88.1	75.2	65.2	57.2	50.8	45.4	0		
21	4.26	9.72	18.1	33.8	48.7	63.1	77.2	91.0	104	118	131	144	157	170	138	113	94.8	80.9	70.2	61.6	54.6	48.9	0		
22	4.48	10.2	19.1	35.6	51.3	66.4	81.2	95.6	110	124	138	151	165	178	148	121	102	86.8	75.2	66.0	58.6	52.4			
23	4.70	10.7	20.0	37.3	53.8	69.7	85.2	100	115	130	145	159	173	187	158	130	109	92.8	80.4	70.6	62.6	56.0			
24	4.92	11.2	20.9	39.1	56.3	72.9	89.2	105	121	136	151	166	181	196	169	138	116	98.9	85.7	75.2	66.7	59.7			
25	5.14	11.7	21.9	40.8	58.8	76.2	93.2	110	126	142	158	174	189	205	180	147	123	105	91.1	80.0	70.9	63.5			
26	5.37	12.2	22.8	42.6	61.4	79.5	97.2	115	132	148	165	181	198	214	190	156	131	112	96.7	84.8	75.2	0		
28	5.81	13.3	24.7	46.2	66.5	86.2	105	124	143	161	179	197	214	232	213	174	146	125	108	94.8	84.1	0		
30	6.26	14.3	26.7	49.7	71.6	92.8	113	134	154	173	193	212	231	249	236	193	162	138	120	105	93.2	0		
32	6.71	15.3	28.6	53.3	76.8	99.5	122	143	165	186	206	227	247	267	260	213	178	152	132	116	0			
35	7.40	16.9	31.5	58.7	84.6	110	134	158	181	205	227	250	272	295	297	243	204	174	151	130	0			
40	8.54	19.5	36.4	67.9	97.7	127	155	182	210	236	263	289	315	340	363	297	249	213	178	0				
润滑 Lubrication	I		II															III							

润滑方式见第19页
若选择虚线右侧部分，请咨询OCM。
多排链的额定功率，用上述额定功率乘以第13页中的多排链系数得出。
注:尺寸会有变化。根据要求提供合格尺寸。
See page 19 for lubrication type.
When your selection fall in the right part of the dotted line, consult us.
For horsepower ratings of multiple strand, multiply the horsepower above by multiple strand factor on page 13.
Note: Dimensions subject to change. Certified dimensions furnished upon request.

OCM ANSI滚子链 ANSI ROLLER CHAIN

链号 Chain No. 160 节距 Pitch ●2.000inch / 50.80mm

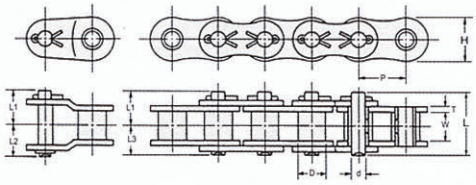

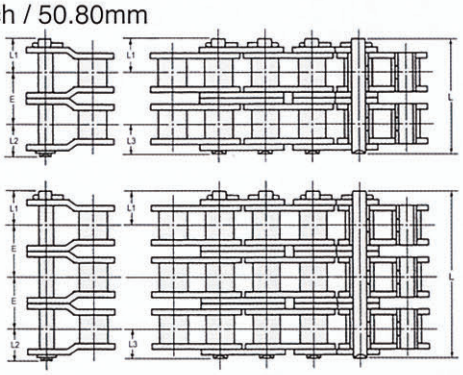

单位UNIT 上方Upper:inch
下方Beneath:mm

OCM 链号 Chain No.	ANSI 链号 ANSI No.	节距 Pitch P	滚子直径 Roller Diam. D	内节内宽 Width between L.P. W	链板 Link Plate H	链板 Link Plate T	销轴直径 Pin Diam. d	销轴 Pin L	销轴 Pin L1	销轴 Pin L2	销轴 Pin L3	排距 Trans Pitch E	平均抗拉强度 Average Tensile Strength Lb/kg	最大工作载荷 Max. Working Load Lb/kg	概略重量 Approx Weight Lb/ft kg/m
OCM160	160	2.000	1.126	1.250	1.899	0.252	0.563	2.723	1.454	1.370	1.269	2.305	57.980	12,128	6.603
		50.80	28.58	31.75	48.2	6.4	14.29	69.1	36.9	34.8	32.2	58.5	26,300	5,500	9.9
OCM160-2	160-2	2.000	1.126	1.250	1.899	0.252	0.563	5.027	1.454	1.370	1.269	2.305	115,960	20,617	13.073
		50.80	28.58	31.75	48.2	6.4	14.29	127.6	36.9	34.8	32.2	58.5	52,600	9,350	19.6
OCM160-3	160-3	2.000	1.126	1.250	1.899	0.252	0.563	7.332	1.454	1.370	1.269	2.305	173,940	30,319	19.543
		50.80	28.58	31.75	48.2	6.4	14.29	186.1	36.9	34.8	32.2	58.5	78,900	13,750	29.3
OCM160-4	160-4	2.000	1.126	1.250	1.899	0.252	0.563	9.637	1.454	1.370	1.269	2.305	231,920	40,021	25.946
		50.80	28.58	31.75	48.2	6.4	14.29	244.6	36.9	34.8	32.2	58.5	105,200	18,150	38.9
OCM160-5	160-5	2.000	1.126	1.250	1.899	0.252	0.563	11.942	1.454	1.370	1.269	2.305	289,900	47,297	32.416
		50.80	28.58	31.75	48.2	6.4	14.29	303.1	36.9	34.8	32.2	58.5	131,500	21,450	48.6
OCM160-6	160-6	2.000	1.126	1.250	1.899	0.252	0.563	14.247	1.454	1.370	1.269	2.305	347,880	55,787	38.886
		50.80	28.58	31.75	48.2	6.4	14.29	361.6	36.9	34.8	32.2	58.5	157,800	25,300	58.3

注:尺寸会有变化。根据要求提供合格尺寸。Note: Dimensions subject to change. Certified dimensions furnished upon request.

单排滚子链额定功率
HORSEPOWER RATINGS SINGLE STRAND ROLLER CHAIN

小链轮齿数 No. of Teeth Small Spkt.	小链轮每分钟转数(rpm) REVOLUTIONS PER MINUTE-SMALL SPROCKET 10	25	50	100	150	200	250	300	350	400	450	500	550	600	650	700	750	800	850	900	1000	1100	1200	1300	1400
11	3.07	7.01	13.1	24.4	35.2	45.6	55.7	65.6	75.4	85.0	94.5	96.6	83.7	73.5	65.2	58.3	52.6	47.7	43.6	40.0	34.1	29.6	26.0	23.0	0
12	3.38	7.70	14.4	26.8	38.6	50.1	61.2	72.1	82.8	93.4	104	110	95.4	83.7	74.2	66.4	59.9	54.4	49.6	45.6	38.9	33.7	29.6	26.3	0
13	3.68	8.40	15.7	29.2	42.1	54.6	66.7	78.6	90.3	102	113	124	108	94.4	83.7	74.9	67.5	61.3	56.0	51.4	43.9	38.0	33.4	29.6	0
14	3.99	9.10	17.0	31.7	45.6	59.1	72.3	85.2	97.8	110	123	135	120	105	93.6	83.7	75.5	68.5	62.6	57.4	49.0	42.5	37.3	33.1	0
15	4.30	9.80	18.3	34.1	49.2	63.7	77.9	91.7	105	119	132	145	133	117	104	92.8	83.7	76.0	69.4	63.7	54.4	47.1	41.4	0	
16	4.61	10.5	19.6	36.6	52.7	68.3	83.5	98.4	113	127	142	156	147	129	114	102	92.2	83.7	76.4	70.2	59.9	51.9	45.6	0	
17	4.92	11.2	20.9	39.1	56.3	72.9	89.1	105	121	136	151	166	161	141	125	112	101	91.7	83.7	75.8	65.6	56.9	49.9	0	
18	5.23	11.9	22.3	41.6	59.9	77.6	94.8	112	128	145	161	177	175	154	136	122	110	99.9	91.2	83.7	71.5	62.0	54.4	0	
19	5.55	12.7	23.6	44.1	63.5	82.2	101	118	136	153	171	188	190	167	148	132	119	108	98.9	90.8	77.5	67.2	59.0	0	
20	5.86	13.4	25.0	46.6	67.1	86.9	106	125	144	162	180	198	205	180	160	143	129	117	107	98.1	83.7	72.6	63.7	0	
21	6.18	14.1	26.3	49.1	70.7	91.6	112	132	152	171	190	209	221	194	172	154	139	126	115	105	90.1	78.1	68.5	0	
22	6.50	14.8	27.7	51.6	74.4	95.3	118	139	159	180	200	220	237	208	184	165	149	135	123	113	96.6	83.7	0		
23	6.82	15.6	29.0	54.2	78.0	101	124	146	167	189	210	231	251	222	197	176	159	144	132	121	103	98.5	0		
24	7.14	16.3	30.4	56.7	81.7	106	129	152	175	197	220	241	263	237	210	188	169	154	140	129	110	95.4	0		
25	7.46	17.0	31.8	59.3	85.4	111	135	159	183	206	229	252	275	252	223	200	180	164	149	137	117	101	0		
26	7.78	17.8	33.1	61.8	89.1	115	141	166	191	215	239	263	287	267	237	212	191	173	158	145	124	108	0		
28	8.43	19.2	35.9	67.0	96.5	125	153	180	207	233	259	285	311	298	265	237	214	194	177	162	139	120	0		
30	9.08	20.7	38.7	72.2	104	135	165	194	223	251	279	307	335	331	293	263	237	215	196	180	154	0			
32	9.74	22.2	41.5	77.4	111	144	176	208	239	269	300	329	359	365	323	289	261	237	216	198	169	0			
35	10.7	24.5	45.7	85.2	123	159	194	229	263	297	330	363	395	417	370	331	298	271	247	227	180	0			
40	12.4	28.3	52.8	98.5	142	184	225	265	304	343	381	419	457	494	452	404	365	331	302	257	0				
润滑 Lubrication	I		II										III												

润滑方式见第19页
若选择虚线右侧部分，请咨询OCM。
多排链的额定功率，用上述额定功率乘以第13页中的多排链系数得出。
注:尺寸会有变化。根据要求提供合格尺寸。
See page 19 for lubrication type.
When your selection fall in the right part of the dotted line, consult us.
For horsepower ratings of multiple strand, multiply the horsepower above by multiple strand factor on page 13.
Note: Dimensions subject to change. Certified dimensions furnished upon request.

OCM ANSI滚子链 ANSI ROLLER CHAIN

链号 Chain No. 180 节距 Pitch ● 2.250inch / 57.15mm

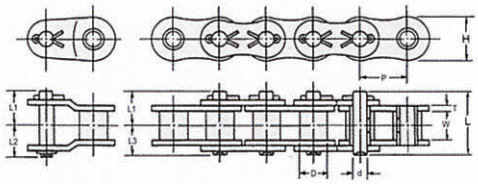

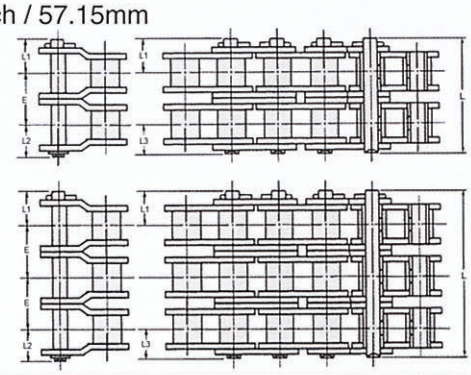

单位UNIT 上方Upper:inch
下方Beneath:mm

OCM 链号 Chain No.	节距 Pitch P	滚子直径 Roller Diam. D	内节内宽 Width between L.P. W	链板 Link Plate H	链板 Link Plate T	销轴直径 Pin Diam. d	销轴 Pin L	销轴 Pin L1	销轴 Pin L2	销轴 Pin L3	排距 Trans Pitch E	平均抗拉强度 Average Tensile Strength Lb/kg	最大工作载荷 Max. Working Load Lb/kg	概略重量 Approx Weight Lb/ft kg/m
OCM180	2.250	1.407	1.407	2.135	0.284	0.688	3.120	1.675	1.543	1.446	2.593	73,630	14,112	8.978
	57.15	35.71	35.7	54.2	7.2	17.45	79.2	42.5	39.2	36.7	65.8	33,400	6,400	13.46
OCM180-2	2.250	1.407	1.407	2.135	0.284	0.688	5.713	1.675	1.543	1.446	2.593	147,260	23,990	17.669
	57.15	35.71	35.7	54.2	7.2	17.45	145.0	42.5	39.2	36.7	65.8	66,800	10,880	26.49
OCM180-3	2.250	1.407	1.407	2.135	0.284	0.688	8.306	1.675	1.543	1.446	2.593	220,900	35,280	25.526
	57.15	35.71	35.7	54.2	7.2	17.45	210.8	42.5	39.2	36.7	65.8	100,200	16,000	38.27
OCM180-4	2.250	1.407	1.407	2.135	0.284	0.688	10.898	1.675	1.543	1.446	2.593	294,500	46,570	33.964
	57.15	35.71	35.7	54.2	7.2	17.45	276.6	42.5	39.2	36.7	65.8	133,600	21,120	50.92
OCM180-5	2.250	1.407	1.407	2.135	0.284	0.688	13.491	1.675	1.543	1.446	2.593	368,170	55,037	42.421
	57.15	35.71	35.7	54.2	7.2	17.45	342.4	42.5	39.2	36.7	65.8	167,000	24,960	63.60
OCM180-6	2.250	1.407	1.407	2.135	0.284	0.688	16.083	1.675	1.543	1.446	2.593	441,800	64,915	50.825
	57.15	35.71	35.7	54.2	7.2	17.45	408.2	42.5	39.2	36.7	65.8	200,400	29,440	76.20

注：尺寸会有变化。根据要求提供合格尺寸。Note: Dimensions subject to change. Certified dimensions furnished upon request.

单排滚子链额定功率
HORSEPOWER RATINGS SINGLE STRAND ROLLER CHAIN

小链轮齿数 No. of Teeth Small Spkt.	小链轮每分钟转数(rpm) REVOLUTIONS PER MINUTE-SMALL SPROCKET 10	25	50	100	150	200	250	300	350	400	450	500	550	600	650	700	750	800	850	900	950	1000	1050	1100
11	4.24	9.68	18.1	33.7	48.6	62.9	76.9	90.6	104	117	124	106	92.0	80.7	71.6	64.1	57.8	52.4	47.9	43.9	40.5	37.5	34.9	32.5
12	4.66	10.6	19.8	37.0	53.4	69.1	84.5	99.6	114	129	142	121	105	92.0	81.6	73.0	65.8	59.7	54.6	50.1	46.2	42.8	39.7	37.1
13	5.08	11.6	21.6	40.4	58.2	75.4	92.1	109	125	141	156	136	118	104	92.0	82.3	74.2	67.4	61.5	55.5	52.1	48.2	44.8	0
14	5.51	12.6	23.4	43.7	63.0	81.6	99.8	118	135	152	169	152	132	116	103	92.0	82.9	75.3	68.7	63.1	58.2	53.9	50.1	0
15	5.93	13.5	25.3	47.1	67.9	88.0	108	127	146	164	182	169	146	129	114	102	92.0	83.5	76.2	70.0	64.5	59.7	55.5	0
16	6.36	14.5	27.1	50.5	72.8	94.3	115	136	156	176	196	186	161	142	126	112	101	92.0	84.0	77.1	71.1	65.8	61.2	0
17	6.79	15.5	28.9	54.0	77.7	101	123	145	167	188	209	204	177	155	138	123	111	101	92.0	84.4	77.9	72.1	0	
18	7.22	16.5	30.8	57.4	82.7	107	131	154	177	200	222	222	193	169	150	134	121	110	100	92.0	84.8	78.5	0	
19	7.66	17.5	32.6	60.8	87.6	114	139	164	188	212	236	241	209	183	163	145	131	119	109	99.8	92.0	85.2	0	
20	8.10	18.5	34.5	64.3	92.6	120	147	173	199	224	249	260	226	198	175	157	142	129	117	108	99.3	92.0	0	
21	8.53	19.5	36.3	67.8	97.6	126	155	182	209	236	262	280	243	213	189	169	152	138	126	116	107	99.0	0	
22	8.97	20.5	38.2	71.3	103	133	163	192	220	248	276	300	260	228	203	181	163	148	135	124	115			
23	9.41	21.5	40.1	74.8	108	140	171	201	231	260	290	318	278	244	216	194	175	159	145	133	123	0		
24	9.86	22.5	42.0	78.3	113	146	179	210	242	273	303	333	296	260	231	206	186	169	154	142	131	0		
25	10.3	23.5	43.9	81.8	118	153	187	220	253	285	317	348	315	277	245	220	198	180	164	151	139	0		
26	10.7	24.5	45.7	85.4	123	159	195	229	264	297	331	363	334	293	260	233	210	191	174	160	0			
28	11.6	26.6	49.6	92.5	133	173	211	249	286	322	358	394	374	328	291	260	235	213	194	178	0			
30	12.5	28.6	53.4	99.6	144	186	227	268	308	347	386	424	414	364	322	289	260	236	216	198	0			
32	13.4	30.7	57.2	107	154	199	244	287	330	372	414	455	456	401	355	318	287	260	238	0				
35	14.8	33.8	63.1	118	170	220	268	316	363	410	456	501	522	458	406	364	328	291	220	0				
40	17.1	39.0	72.9	136	196	254	310	365	420	473	526	579	575	524	465	398	324	244	0					
润滑 Lubrication	I		II										III											

润滑方式见第19页
若选择虚线右侧部分，请咨询OCM。
多排链的额定功率，用上述额定功率乘以第13页中的多排链系数得出。
注：尺寸会有变化。根据要求提供合格尺寸。
See page 19 for lubrication type.
When your selection fall in the right part of the dotted line, consult us.
For horsepower ratings of multiple strand, multiply the horsepower above by multiple strand factor on page 13.
Note: Dimensions subject to change. Certified dimensions furnished upon request.

OCM ANSI滚子链 ANSI ROLLER CHAIN

链号 Chain No. 200 节距 Pitch ● 2.500inch / 63.50mm

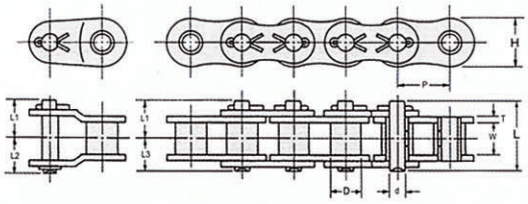

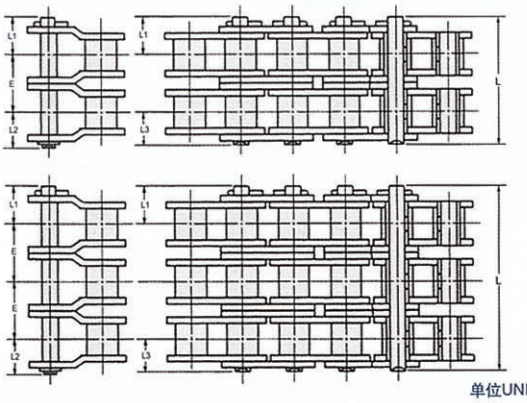

单位UNIT 上方Upper:inch
下方Beneath:mm

OCM 链号 Chain No.	ANSI 链号 ANSI No.	节距 Pitch P	滚子直径 Roller Diam. D	内节内宽 Width between L.P. W	链板 Link Plate H	链板 Link Plate T	销轴直径 Pin Diam. d	销轴 Pin L	销轴 Pin L1	销轴 Pin L2	销轴 Pin L3	排距 Trans Pitch E	平均抗拉强度 Average Tensile Strength Lb/kg	最大工作载荷 Max. Working Load Lb/kg	概略重量 Approx Weight Lb/ft kg/m
OCM200	200	2.500	1.563	1.500	2.368	0.315	0.782	3.361	1.785	1.670	1.576	2.821	95,000	15,876	11.066
		63.50	39.68	38.1	60.1	8.0	19.85	85.3	45.3	42.4	40.0	71.6	43,100	7,200	16.5
OCM200-2	200-2	2.500	1.563	1.500	2.368	0.315	0.782	6.182	1.785	1.670	1.576	2.821	190,000	26,989	21.678
		63.50	39.68	38.1	60.1	8.0	19.85	156.9	45.3	42.4	40.0	71.6	86,200	12,240	32.5
OCM200-3	200-3	2.500	1.563	1.500	2.368	0.315	0.782	9.003	1.785	1.670	1.576	2.821	285,050	39,690	32.416
		63.50	39.68	38.1	60.1	8.0	19.85	228.5	45.3	42.4	40.0	71.6	129,300	18,000	48.6
OCM200-4	200-4	2.500	1.563	1.500	2.368	0.315	0.782	11.824	1.785	1.670	1.576	2.821	380,070	52,391	43.088
		63.50	39.68	38.1	60.1	8.0	19.85	300.1	45.3	42.4	40.0	71.6	172,400	23,760	64.6
OCM200-5	200-5	2.500	1.563	1.500	2.368	0.315	0.782	14.645	1.785	1.670	1.576	2.821	475,090	61,916	53.760
		63.50	39.68	38.1	60.1	8.0	19.85	371.7	45.3	42.4	40.0	71.6	215,500	28,080	80.6
OCM200-6	200-6	2.500	1.563	1.500	2.368	0.315	0.782	17.466	1.785	1.670	1.576	2.821	570,100	73,030	64.432
		63.50	39.68	38.1	60.1	8.0	19.85	443.3	45.3	42.4	40.0	71.6	258,600	33,120	96.6

注:尺寸会有变化。根据要求提供合格尺寸。Note: Dimensions subject to change. Certified dimensions furnished upon request.

单排滚子链额定功率
HORSEPOWER RATINGS SINGLE STRAND ROLLER CHAIN

小链轮齿数 No. of Teeth Small Spkt.	小链轮每分钟转数(rpm) REVOLUTIONS PER MINUTE-SMALL SPROCKET 10	15	50	30	40	50	70	100	150	200	250	300	350	400	450	500	550	600	650	700
9	4.54	6.54	8.47	12.2	15.8	19.3	26.1	36.0	51.9	67.3	82.2	95.9	111	119	100	85.4	74.1	65.0	57.6	0
10	5.08	7.32	9.49	13.7	17.7	21.6	29.3	40.4	58.2	75.4	92.1	109	125	140	117	100	86.7	76.1	67.5	0
11	5.64	8.12	10.5	15.1	19.6	24.0	32.5	44.8	64.5	83.5	102	120	138	156	135	115	100	87.8	77.9	0
12	6.19	8.92	11.6	16.6	21.6	26.4	35.7	49.2	70.8	91.8	112	132	152	171	154	132	114	100	0	
13	6.75	9.72	12.6	18.1	23.5	28.7	38.9	53.6	77.2	100	122	144	166	187	174	148	129	113	0	
14	7.31	10.5	13.6	19.7	25.5	31.1	42.1	58.1	83.7	108	132	156	179	202	194	166	144	126	0	
15	7.88	11.3	14.7	21.2	27.4	33.5	45.4	62.6	90.1	117	143	168	193	218	215	184	159	140	0	
16	8.45	12.2	15.8	22.7	29.4	36.0	48.7	67.1	96.6	125	153	180	207	234	237	203	176	154	0	
17	9.02	13.0	16.8	24.2	31.4	38.4	52.0	71.6	103	134	163	193	221	249	260	222	192	169	0	
18	9.59	13.8	17.9	25.8	33.4	40.8	55.3	76.2	110	142	174	205	235	265	283	242	209	184	0	
19	10.2	14.6	19.0	27.3	35.4	43.3	58.6	80.8	116	151	184	217	249	281	307	262	227	199	0	
20	10.7	15.5	20.1	28.9	37.4	45.8	61.9	85.4	123	159	195	229	264	297	331	283	245	0		
21	11.3	16.3	21.1	30.5	39.5	48.2	65.3	90.0	130	168	205	242	278	313	348	305	264	0		
22	11.9	17.2	22.2	32.0	41.5	50.7	68.7	94.6	136	177	216	254	292	330	366	327	283	0		
23	12.5	18.0	23.3	33.6	43.5	53.2	72.0	99.3	143	185	226	267	307	346	384	349	303	0		
24	13.1	18.9	24.4	35.2	45.6	55.7	75.4	104	150	194	237	279	321	362	402	372	323	0		
25	13.7	19.7	25.5	36.8	47.6	58.2	78.8	109	156	203	248	292	335	378	421	396	343	0		
26	14.3	20.6	26.6	38.4	49.7	60.7	82.2	113	163	212	259	305	350	395	439	420	364	0		
润滑 Lubrication	I				II							III								

润滑方式见第19页
若选择虚线右侧部分，请咨询OCM。
多排链的额定功率，用上述额定功率乘以第13页中的多排链系数得出。
注:尺寸会有变化。根据要求提供合格尺寸。
See page 19 for lubrication type.
When your selection fall in the right part of the dotted line, consult us.
For horsepower ratings of multiple strand, multiply the horsepower above by multiple strand factor on page 13.
Note: Dimensions subject to change. Certified dimensions furnished upon request.

OCM ANSI滚子链 ANSI ROLLER CHAIN

链号 Chain No. 240 节距 Pitch ●3.000inch / 76.20mm

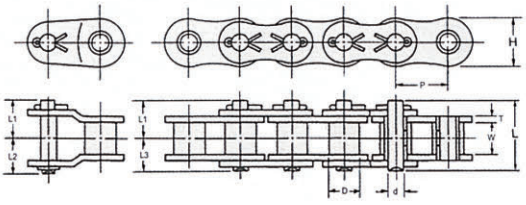

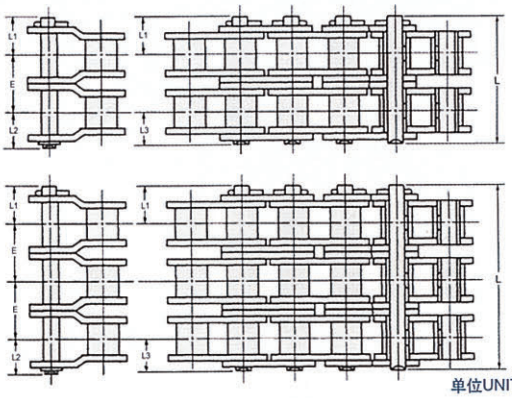

单位UNIT 上方Upper:inch
下方Beneath:mm

OCM 链号 Chain No.	ANSI 链号 ANSI No.	节距 Pitch P	滚子直径 Roller Diam. D	内节内宽 Width between L.P. W	链板 Link Plate H	链板 Link Plate T	销轴直径 Pin Diam. d	销轴 Pin L	销轴 Pin L1	销轴 Pin L2	销轴 Pin L3	排距 Trans Pitch E	平均抗拉强度 Average Tensile Strength Lb/kg	最大工作载荷 Max. Working Load Lb/kg	概略重量 Approx Weight Lb/ft kg/m
OCM240	240	3.000	1.877	1.890	2.850	0.374	0.938	4.125	2.199	2.055	1.927	3.459	149,940	21,830	16.542
		76.20	47.63	48.0	72.4	9.5	23.80	104.7	55.8	52.2	48.9	87.8	68,000	9,900	24.8
OCM240-2	240-2	3.000	1.877	1.890	2.850	0.374	0.938	7.585	2.199	2.055	1.927	3.459	299,880	37,110	32.683
		76.20	47.63	48.0	72.4	9.5	23.80	192.5	55.8	52.2	48.9	87.8	136,000	16,830	49.0
OCM240-3	240-3	3.000	1.877	1.890	2.850	0.374	0.938	11.044	2.199	2.055	1.927	3.459	449,820	54,574	48.758
		76.20	47.63	48.0	72.4	9.5	23.80	280.3	55.8	52.2	48.9	87.8	204,000	24,750	73.1
OCM240-4	240-4	3.000	1.877	1.890	2.850	0.374	0.938	14.503	2.199	2.055	1.927	3.459	599,760	72,037	64.832
		76.20	47.63	48.0	72.4	9.5	23.80	368.1	55.8	52.2	48.9	87.8	272,000	32,670	97.2
OCM240-5	240-5	3.000	1.877	1.890	2.850	0.374	0.938	17.962	2.199	2.055	1.927	3.459	749,700	85,135	80.907
		76.20	47.63	48.0	72.4	9.5	23.80	455.9	55.8	52.2	48.9	87.8	340,000	38,610	121.3
OCM240-6	240-6	3.000	1.877	1.890	2.850	0.374	0.938	21.422	2.199	2.055	1.927	3.459	899,640	100,416	96.846
		76.20	47.63	48.0	72.4	9.5	23.80	543.7	55.8	52.2	48.9	87.8	408,000	45,540	145.2

注:尺寸会有变化。根据要求提供合格尺寸。Note: Dimensions subject to change. Certified dimensions furnished upon request.

单排滚子链额定功率
HORSEPOWER RATINGS SINGLE STRAND ROLLER CHAIN

小链轮齿数 No. of Teeth Small Spkt.	小链轮每分钟转数(rpm) REVOLUTIONS PER MINUTE-SMALL SPROCKET 5	10	15	20	25	30	40	50	60	80	100	125	150	175	200	250	300	350	400	450	500
9	3.92	7.31	10.5	13.6	16.7	19.6	25.4	31.1	36.7	47.5	58.1	71.0	83.6	96.1	108	132	156	169	138	116	0
10	4.39	8.19	11.8	15.3	18.7	22.0	28.5	34.9	41.1	53.2	65.0	79.5	93.7	108	121	148	175	198	162	136	0
11	4.86	9.08	13.1	16.9	20.7	24.4	31.6	38.6	45.5	59.0	72.1	88.1	104	119	135	164	194	223	187	156	0
12	5.34	9.97	14.4	18.6	22.7	26.8	34.7	42.4	50.0	64.8	79.2	96.8	114	131	148	181	213	245	218	0	
13	5.83	10.9	15.7	20.3	24.8	29.2	37.9	46.3	54.5	70.6	86.4	106	124	143	161	197	232	267	240	0	
14	6.31	11.8	17.0	22.0	26.9	31.7	41.0	50.1	59.1	76.5	93.6	114	135	155	175	213	251	289	268	0	
15	6.80	12.7	18.3	23.7	28.9	34.1	44.2	54.0	63.6	82.4	101	123	145	167	188	230	271	311	297	0	
16	7.29	13.6	19.6	25.4	31.0	36.6	47.4	57.9	68.2	88.4	108	132	156	179	202	247	290	334	328	0	
17	7.78	14.5	20.9	27.1	33.1	39.0	50.6	61.8	72.9	94.4	115	141	166	191	215	263	310	356	359	0	
18	8.28	15.4	22.3	28.8	35.2	41.5	53.8	65.8	77.5	100	123	150	177	203	229	280	330	379	377	0	
19	8.78	16.4	23.6	30.6	37.4	44.0	57.0	69.7	82.2	106	130	159	187	215	243	297	350	402	393	0	
20	9.28	17.3	24.9	32.3	39.5	46.5	60.3	73.7	86.8	112	138	168	198	228	257	314	370	423	407	0	
21	9.78	18.2	26.3	34.1	41.6	49.0	63.5	77.7	91.5	119	145	177	209	240	270	331	390	439	421	0	
22	10.3	19.2	27.6	35.8	43.8	51.6	66.8	81.7	96.2	125	152	186	220	252	284	348	410	454	435	0	
23	10.8	20.1	29.0	37.6	45.9	54.1	70.1	85.7	101	131	160	195	230	265	298	365	430	469	448	0	
24	11.3	21.1	30.4	39.3	48.1	56.7	73.4	89.7	106	137	167	205	241	277	312	382	450	483	0		
25	11.8	22.0	31.7	41.1	50.3	59.2	76.7	93.8	110	143	175	214	252	290	327	399	470	496	0		
26	12.3	23.0	33.1	42.9	52.4	61.8	80.0	97.8	115	149	183	223	263	302	341	416	491	509	0		
润滑 Lubrication	I						II								III						

润滑方式见第19页
若选择虚线右侧部分，请咨询OCM。
多排链的额定功率，用上述额定功率乘以第13页中的多排链系数得出。
注:尺寸会有变化。根据要求提供合格尺寸。
See page 19 for lubrication type.
When your selection fall in the right part of the dotted line, consult us.
For horsepower ratings of multiple strand, multiply the horsepower above by multiple strand factor on page 13.
Note: Dimensions subject to change. Certified dimensions furnished upon request.

ANSI重载系列滚子链
ANSI ROLLER CHAIN HEAVY SERIES

重载系列的链板厚度与标准滚子链不同，其他均为一致。抗拉强度没有增加，但厚重的链板有助于承受异常冲击载荷。

Heavy Series differs from standard roller chain in link plate thickness. All the others are identical. There is no increase in tensile strength, but the thick link plate helps withstand abnormal shock loads.

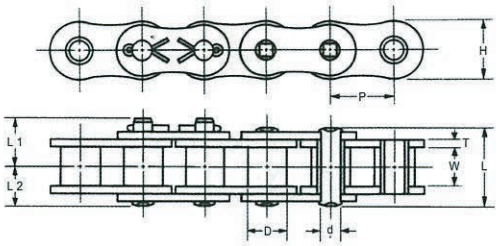

单位UNIT 上方Upper:inch
下方Beneath:mm

OCM 链号 Chain No.	ANSI 链号 ANSI No.	节距 Pitch P	滚子直径 Roller Diam. D	内节内宽 Width between L.P. W	链板 Link Plate H	链板 Link Plate T	销轴直径 Pin Diam. d	销轴 Pin L	销轴 Pin L1	销轴 Pin L2	平均抗拉强度 Average Tensile Strength Lb/kg	最大工作载荷 Max. Working Load Lb/kg	概略重量 Approx Weight Lb/ft kg/m
OCM 35H		0.375	★ 0.200	0.189	0.358	0.079	0.141	0.583	-	-	3,902	728	0.356
		9.525	★ 5.08	4.80	9.10	2.00	3.58	14.80	-	-	1,770	330	0.53
OCM 40H		0.500	0.313	0.313	■ 0.472	0.079	0.156	0.689	-	-	5,181	1,235	0.558
		12.70	7.94	7.95	■ 12.00	2.00	3.96	17.50	-	-	2,350	560	0.83
OCM 50H		0.625	0.400	0.376	0.591	0.094	0.200	0.862	-	-	8,818	1,543	0.806
		15.875	10.16	9.55	15.00	2.40	5.08	21.90	-	-	4,000	700	1.20
OCM 60H	60H	0.750	0.469	0.500	0.709	0.126	0.234	1.130	0.650	0.563	9,921	2,425	1.263
		19.05	11.91	12.70	18.00	3.20	5.95	28.70	16.50	14.30	4,500	1,100	1.88
OCM 80H	80H	1.000	0.625	0.626	0.949	0.157	0.313	1.413	0.839	0.709	17,637	3,968	2.083
		25.40	15.88	15.90	24.10	4.00	7.94	35.90	21.30	18.00	8,000	1,800	3.10
OCM 100H	100H	1.250	0.750	0.754	1.185	0.189	0.375	1.697	0.992	0.850	26,455	6,173	3.091
		31.75	19.05	19.15	30.10	4.80	9.53	43.10	25.20	21.60	12,000	2,800	4.60
OCM 120H	120H	1.500	0.875	1.006	1.425	0.220	0.437	2.110	1.185	1.055	37,038	7,937	4.435
		38.10	22.23	25.55	36.20	5.60	11.11	53.60	30.10	26.80	16,800	3,600	6.60
OCM 140H	140H	1.750	1.000	1.000	1.661	0.252	0.500	2.260	1.315	1.130	48,722	10,362	5.644
		44.45	25.40	25.40	42.20	6.40	12.70	57.40	33.40	28.70	22,100	4,700	8.40
OCM 160H	160H	2.000	1.125	1.250	1.898	0.283	0.563	2.673	1.520	1.339	60,186	12,566	7.19
		50.80	28.58	31.75	48.20	7.20	14.29	67.90	38.60	34.00	27,300	5,700	10.7
OCM 200H	200H	2.500	1.562	1.500	2.366	0.374	0.781	3.398	1.909	1.701	103,617	16,314	12.229
		63.50	39.68	38.10	60.10	9.50	19.84	86.30	48.50	43.20	47,000	7,400	18.2

★ 指套筒直径 ■ 指直边链板
★ indicates bush diameter ■ indicates straight link plate

双节距滚子链
DOUBLE PITCH ROLLER CHAIN

该链条比标准滚子链更经济，适于轴中心距长的运行条件。有不锈钢链条。

This chain is more economical than standard roller chain and well suited for applications where shaft centers are long. Stainless steel chain is available.

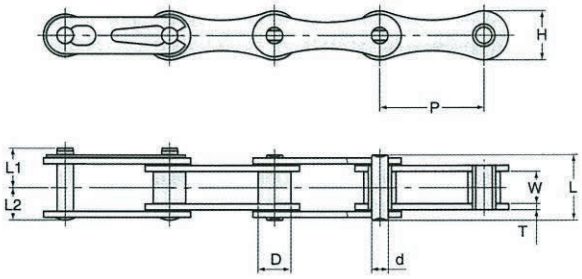

单位UNIT 上方Upper:inch
下方Beneath:mm

OCM 链号 Chain No.	ANSI 链号 ANSI No.	节距 Pitch P	滚子直径 Roller Diam. D	内节内宽 Width between L.P. W	链板 Link Plate H	链板 Link Plate T	销轴直径 Pin Diam. d	销轴 Pin L	销轴 Pin L1	销轴 Pin L2	平均抗拉强度 Average Tensile Strength Lb/kg	概略重量 Approx Weight Lb/ft kg/m
OCM 2040	2040	1.000	0.312	0.312	0.472	0.060	0.156	0.634	0.382	0.319	3,784	0.27
		25.40	7.94	7.92	12.0	1.5	3.96	16.1	9.7	8.1	1,950	0.41
OCM2050	2050	1.250	0.400	0.376	0.591	0.080	0.200	0.799	0.476	0.409	6,380	0.45
		31.75	10.16	9.55	15.0	2.0	5.08	20.3	12.1	10.4	3,200	0.67
OCM2060	2060	1.500	0.469	0.500	0.677	0.094	0.234	1.000	0.579	0.500	8,910	0.63
		38.10	11.91	12.70	17.2	2.4	5.95	25.4	14.7	12.7	4,450	0.94
OCM2080	2080	2.000	0.625	0.626	0.945	0.125	0.312	1.287	0.760	0.647	16,060	1.139
		50.80	15.88	15.90	24.0	3.2	7.94	32.7	19.3	16.3	7,500	1.70

1. 2040~2060的连接链节以卡簧片式为标准。2080和2080以上为开口销式。
注：尺寸会有变化。根据要求提供合格尺寸。
1. Spring clip type is standard for connecting links of 2040 through 2060 and cotter for 2080 and above.
Note: Dimensions subject to change. Certified dimensions furnished upon request.

OCM 自润滑链条
OCM SELUBE CHAIN

OCM SELUBE自润滑链条耐磨性极好，无需润滑，是标准滚子链的8到30倍。

OCM SELUBE chains provide excellent wear life without lubrication as much as 8 to 30 times better than standard roller chain.

SELUBE自润滑链条是由渗有高质量油的烧结粉末冶金套筒和镀膜处理的销轴构成。因SELUBE自润滑链条无需润滑，适用于润滑作业无法实施或不可行的运行条件。所有主要尺寸与标准滚子链相同。
SELUBE自润滑链条可代用ANSI标准滚子链。运行温度范围应在−10℃（14°F）到150℃（300°F）。链条运行速度应保持在150米（490英尺）/分以下。

SELUBE chain is made up of sintered metal bushings impregnated with high quality oil and plated pins. As SELUBE chain does not require lubrication, it is suitable for applications where lubrication is not possible or practical. All major dimensions are the same as standard roller chain.
SELUBE chain can immediately replace standard ANSI roller chain. The operating temperature should be within a range of -10℃ (14°F) to 150℃ (300°F). The chain operating speed should be kept below 150m (490feet) per minute.

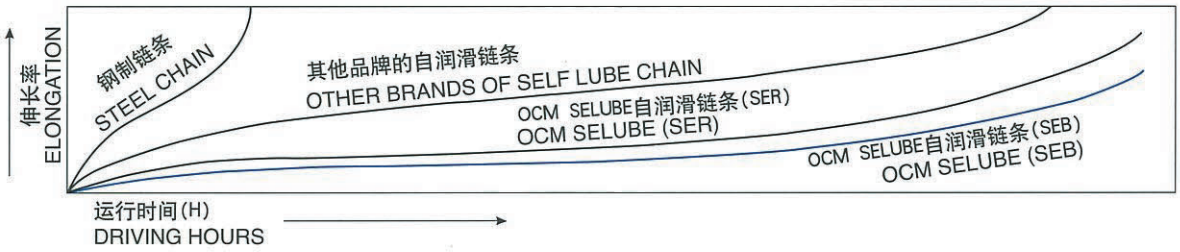

SEB型SELUBE自润滑链条具有与标准滚子链相同的最大容许载荷控制线。该链条配有带重载链板的突肩式烧结套筒。与SER型相比，SEB型的套筒规格更大，渗油量更多，无需润滑，比SER型使用寿命更长。该链条可在标准链轮上运行。

SEB type SELUBE chain has the same maximum allowable load guidelines as standard roller chain. This chain has shouldered sintered bushings with heavy link plates. As compared with SER type, the bushings of SEB are larger and more oil impregnated. SEB type can last longer than SER wihtout lubrication. This chain can operate on standard sprockets.

SEB

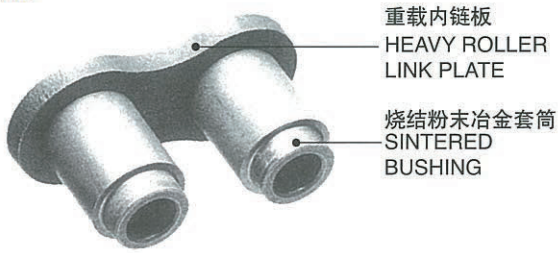

SER型SELUBE自润滑链条具有与标准滚子链相同的最大容许载荷控制线。该链条配有带滚子和重载内链板的直筒式套筒。
SER型链条与链轮咬合顺滑，该链条可在标准链轮上运行。

SER type SELUBE chain has the same maximum allowable load guidelines as standard roller chain.
This chain has straight bushings with rollers and heavy roller link plates.
SER type chain offers smooth engagement with the sprocket. This chain can operate on standard sprockets.

SER

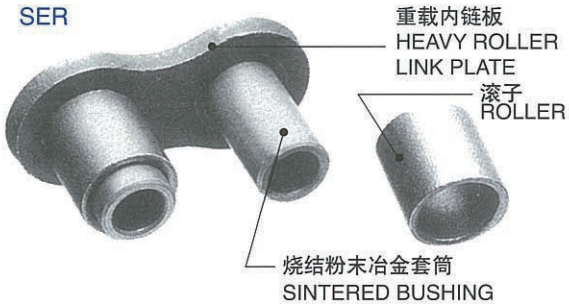

SELUBE 小型输送链条配有渗高质量油的直筒式烧结粉末冶金套筒和坚硬的滚轮。
该链条可替代标准输送链条，在标准链轮上运行。
SELUBE 小型输送链条的强度低于SER型、SEB型和标准钢制链条。

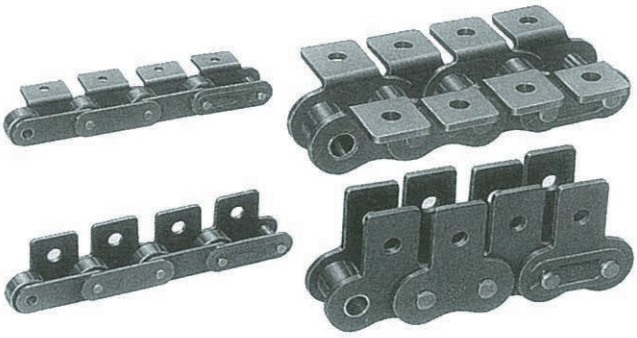

SELUBE small conveyor chain
has straight sintered bushings impregnated with high quality oil and strong rollers.
This chain can replace standard conveyor chain and operate on standard sprockets.
The strenght of SELUBE small conveyor is lower than that of SER, SEB and standard steel chain.

SELUBE自润滑链条
SELUBE CHAIN

SEB

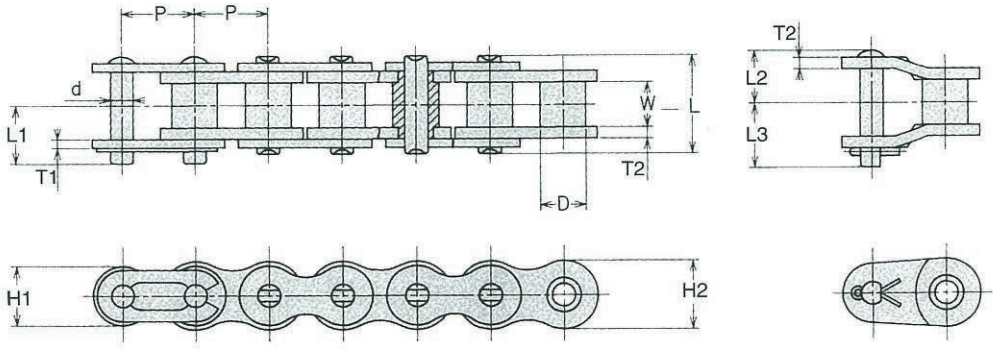

40J-SEB~60J-SEB

SER

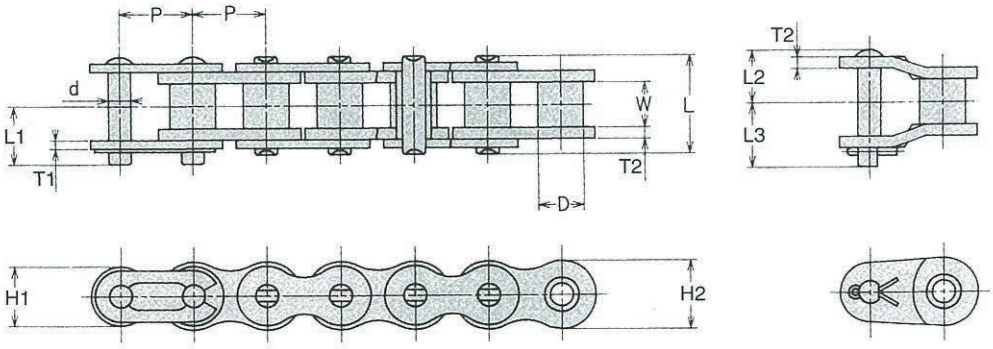

40J-SEB~120J-SER

单位UNIT 上方Upper:inch
下方Beneath:mm

OCM 链号 Chain No.	节距 Pitch P	滚子直径 Roller Diam. D	内节内宽 Width between L.P. W	链板 Link Plate H1	H2	T1	T2	销轴直径 Pin Diam. d	销轴 Pin L	L1	L2	L3	平均抗拉强度 Average Tensile Strength Lb/kgf	最大容许载荷 Max Allowable Load Lb/kgf	概略重量 Approx Weight Lb/ft kg/m
40J-SER	0.500	0.312	0.311	0.409	0.472	0.059	0.079	0.156	0.681	0.402	0.362	0.445	4,299	830	0.48
40J-SEB	12.70	7.92	7.90	10.40	12.00	1.50	2.00	3.96	17.30	10.20	9.20	11.30	1,950	390	0.72
50J-SER	0.625	0.400	0.374	0.512	0.591	0.080	0.094	0.200	0.836	0.496	0.429	0.520	7,165	1,389	0.77
50J-SEB	15.875	10.16	9.50	13.00	15.00	2.00	2.40	5.08	21.20	12.60	10.90	13.20	3,250	630	1.14
60J-SER	0.75	0.469	0.500	0.602	0.709	0.094	0.126	0.234	1.079	0.61	0.571	0.669	9,921	2,094	1.17
60J-SEB	19.05	11.91	12.70	15.30	18.00	2.40	3.20	5.95	27.40	15.50	14.50	17.00	4,500	950	1.74
80J-SER	1.000	0.625	0.626	0.819	0.949	0.126	0.157	0.313	1.354	0.776	0.768	0.839	17,637	3,638	2.02
	25.40	15.88	15.90	20.80	24.10	3.20	4.00	7.94	34.30	19.70	19.50	21.30	8,000	1,650	3.00
100J-SER	1.250	0.750	0.754	1.024	1.185	0.157	0.189	0.375	1.634	0.950	0.913	0.992	26,455	5,512	2.96
	31.75	19.05	19.15	26.00	30.10	4.00	4.80	9.53	41.50	24.30	23.20	25.20	12,000	2,500	4.40
120J-SER	1.500	0.875	1.006	1.228	1.425	0.189	0.22	0.437	2.035	1.15	1.138	1.185	37,479	7,275	4.30
	38.10	22.23	25.55	31.20	36.20	4.80	5.60	11.11	51.70	29.20	28.90	30.10	17,000	3,300	6.40

SELUBE自润滑小型输送链条
SELUBE SMALL CONVEYOR CHAIN

SELUBE自润滑双节距滚子链
SELUBE DOUBLE PITCH ROLLER CHAIN

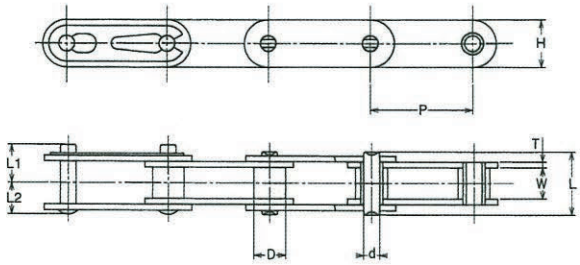

小滚子型
SMALL ROLLER

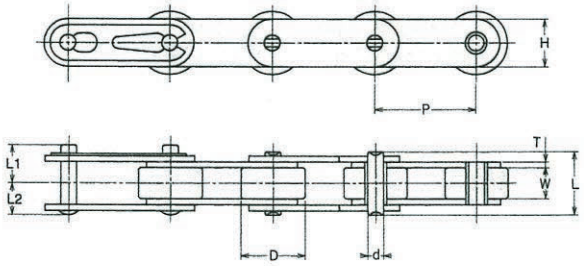

大滚子型
LARGE ROLLER

单位UNIT 上方Upper:inch
下方Beneath:mm

OCM 链号 Chain No.	节距 Pitch P	滚子直径 Roller Diam. D	内节内宽 Width between L.P. W	链板 Link Plate H	链板 Link Plate T	销轴直径 Pin Diam. d	销轴 Pin L	销轴 Pin L1	销轴 Pin L2	平均抗断载荷 Average Breaking Load Lb/kN{kgf}	最大容许载荷 Max Allowable Load Lb/kN{kgf}	概略重量 Approx Weight Lb/ft kg/m
OCM-C2040-SER	1.000	0.312/ 7.94	0.312	0.472	0.059	0.156	0.634	0.382	0.319	3,520	616	0.34/0.51
OCM-C2042-SER	25.40	0.625/15.88	7.95	12.0	1.5	3.96	16.1	9.7	8.1	15.69{1,600}	2.75{ 280}	0.58/0.87
OCM-C2050-SER	1.250	0.400/10.16	0.376	0.591	0.079	0.200	0.799	0.476	0.409	5,720	1,012	0.58/0.87
OCM-C2052-SER	31.75	0.750/19.05	9.55	15.0	2.0	5.08	20.3	12.1	10.4	25.49{2,600}	4.51{ 460}	0.90/1.35
OCM-C2060H-SER	1.500	0.469/11.91	0.500	0.677	0.126	0.234	1.130	0.650	0.563	8,360	1,408	1.01/1.51
OCM-C2062H-SER	38.10	0.875/22.23	12.70	17.2	3.2	5.95	28.7	16.5	14.3	37.26{3,800}	6.27{ 640}	1.47/2.19
OCM-C2080H-SER	2.000	0.625/15.88	0.626	0.945	0.157	0.312	1.413	0.830	0.709	14,300	2,354	1.77/2.66
OCM-C2082H-SER	50.80	1.125/28.58	15.90	24.0	4.0	7.94	35.9	21.3	18.0	63.73{6,500}	10.49{1,070}	2.45/3.68

SELUBE自润滑小型输送链条
SELUBE SMALL CONVEYOR CHAIN

SELUBE自润滑带附板滚子链
SELUBE ROLLER CHAIN WITH ATTACHMENT

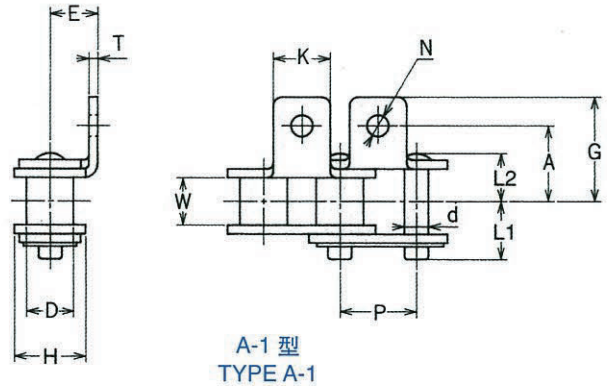

A-1 型
TYPE A-1

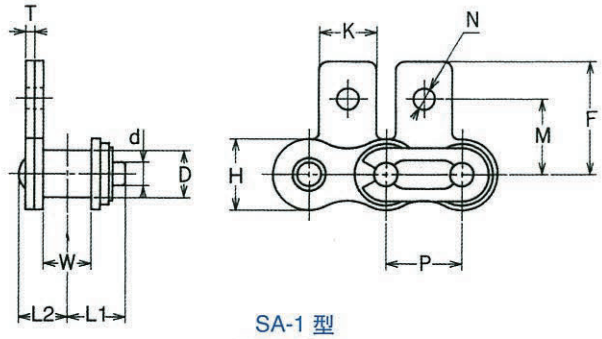

SA-1 型
TYPE SA-1

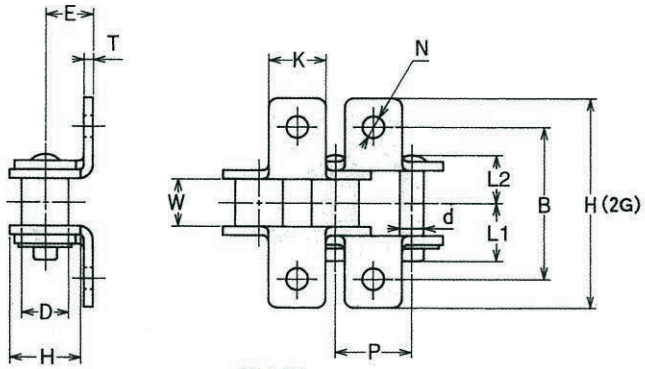

K-1 型
TYPE K-1

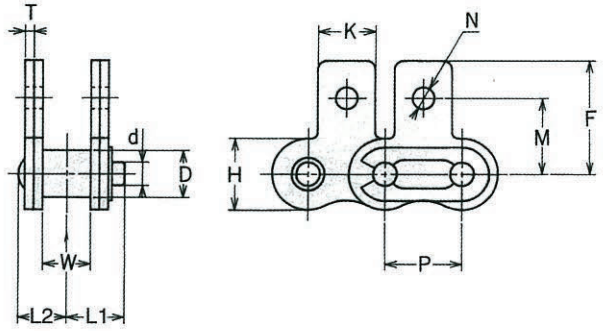

SK-1 型
TYPE SK-1

单位UNIT 上方Upper:inch
下方Beneath:mm

OCM 链号 Chain No.	节距 Pitch P	滚子直径 Roller Diam. D	内节内宽 Width between L.P. W	链板 Link Plate H	链板 Link Plate T	销轴直径 Pin Diam. d	销轴 Pin L1	销轴 Pin L2	平均抗断载荷 Average Breaking Load Lb/kN{kgf}	最大容许载荷 Max Allowable Load Lb/kN{kgf}	不带附板概略重量 Approx Weight Without Attachment Lb/ft·kg/m
OCM 40-SER	0.500 12.70	0.312 7.94	0.313 7.95	0.472 12.0	0.059 1.5	0.155 3.96	0.381 9.7	0.318 8.1	3,520 15.69 {1,600}	616 2.75 { 280}	0.443 0.66
OCM 50-SER	0.625 15.875	0.400 10.16	0.375 9.55	0.590 15.0	0.078 2.0	0.200 5.08	0.476 12.1	0.409 10.4	5,720 25.49 {2,600}	1,012 4.51 { 460}	0.725 1.08
OCM 60-SER	0.750 19.05	0.468 11.91	0.500 12.70	0.708 18.0	0.094 2.4	0.234 5.95	0.578 14.7	0.500 12.7	8,360 37.26 {3,800}	1,408 6.27 { 640}	1.075 1.60
OCM 80-SER	1.000 25.40	0.625 15.88	0.626 15.90	0.944 24.0	0.125 3.2	0.312 7.94	0.740 18.8	0.641 16.3	14,300 63.73 {6,500}	2,354 10.49 {1,070}	1.881 2.80

OCM 链号 Chain No.	(A)附板 (A) Attachment K	N	A	E	G	(K)附板 (K) Attachment (2A)B	(2G)H	(SA·SK)附板 (SA·SK) Attachment M	F	每块附板附加重量 Additional Weight Per Attachment A.SA(Lb/kg)	K.SK(Lb/kg)
OCM 40-SER	0.374 9.5	0.141 3.6	0.500 12.7	0.314 8.0	0.690 17.55	1.000 25.4	1.381 35.1	0.500 12.7	0.750 19.05	0.002 0.001	0.004 0.002
OCM 50-SER	0.500 12.7	0.204 5.2	0.626 15.9	0.405 10.3	0.909 23.1	1.252 31.8	1.818 46.2	0.627 15.95	0.994 25.25	0.008 0.004	0.017 0.008
OCM 60-SER	0.626 15.9	0.204 5.2	0.750 19.05	0.468 11.9	1.094 27.8	1.500 38.1	2.189 55.6	0.720 18.3	1.154 29.33	0.015 0.007	0.030 0.014
OCM 80-SER	0.751 19.1	0.267 6.8	1.000 25.4	0.626 15.9	1.276 32.4	2.000 50.8	2.551 64.8	0.968 24.6	1.366 34.7	0.024 0.011	0.048 0.022

SELUBE自润滑小型输送链条
SELUBE SMALL CONVEYOR CHAIN

SELUBE自润滑带附板双节距滚子链
SELUBE DOUBLE PITCH ROLLER CHAIN WITH ATTACHMENT

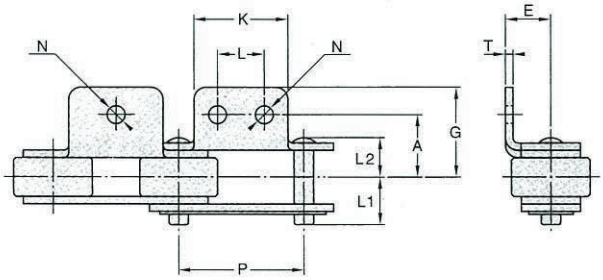

A-1 · 2 型
TYPE A-1 · 2

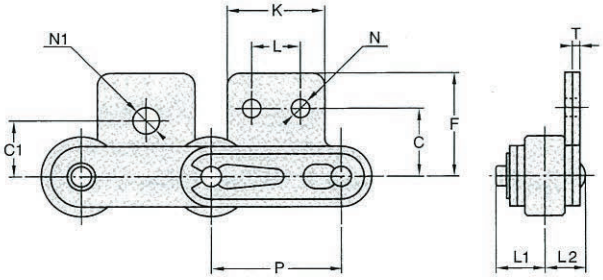

SA-1 · 2 型
TYPE SA-1 · 2

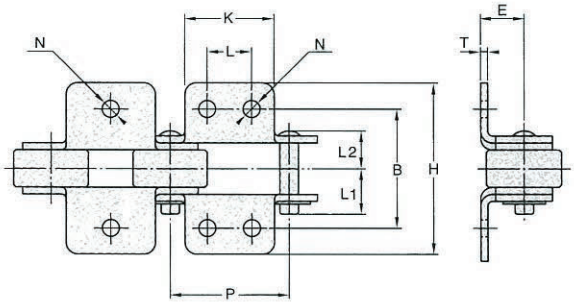

K-1 · 2 型
TYPE K-1 · 2

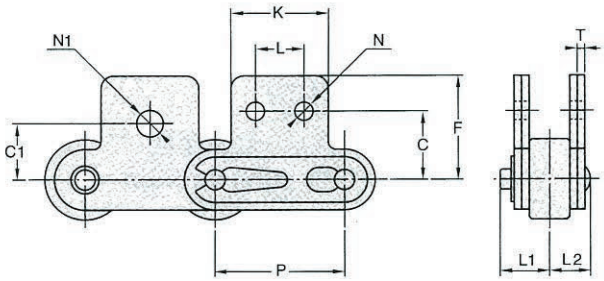

SK-1 · 2 型
TYPE SK-1 · 2

单位UNIT 上方Upper:inch
下方Beneath:mm

OCM 链号 Chain No.	节距 Pitch	链板 Link Plate	(A)附板 (A) Attachment						(K)附板 (K)Attachment		(SA–SK)附板 (SA·SK) Attachment				平均抗断载荷 Average Breaking Load	最大容许载荷 Max. Allowable Load	每块附板附加重量 Additional Weight Per Att Lb/kg	
	P	T	K	N	L	A	E	G	(2A)B	(2G)H	C	F	C1	N1	Lb/kN{kgf}	Lb/kN{kgf}	A.SA	K.SK
OCM C2040-SER	1.000	0.059	0.750	0.142	0.375	0.500	0.358	0.780	1.000	1.559	0.531	0.807	0.437	0.205	3,520	616	0.006	0.013
OCM C2042-SER	25.40	1.5	19.1	3.6	9.5	12.7	9.1	19.8	25.4	39.6	13.5	20.5	11.1	5.2	15.69 {1,600}	2.75 { 280}	0.003	0.006
OCM C2050-SER	1.250	0.079	0.937	0.205	0.469	0.625	0.437	0.965	1.252	1.929	0.625	0.984	0.563	0.268	5,720	1,012	0.013	0.026
OCM C2052-SER	31.75	2.0	23.8	5.2	11.9	15.9	11.1	24.5	31.8	49.0	15.9	25.0	14.3	6.8	25.49 {2,600}	4.51 { 460}	0.006	0.012
OCM C2060H-SER	1.500	0.126	1.125	0.205	0.563	0.843	0.579	1.240	1.685	2.669	0.750	1.295	0.689	0.346	8,360	1,408	0.037	0.075
OCM C2062H-SER	38.10	3.2	28.6	5.2	14.3	21.4	14.7	31.5	42.8	67.8	19.1	32.9	17.5	8.8	37.26 {3,800}	6.27 { 640}	0.017	0.034
OCM C2080H-SER	2.000	0.157	1.500	0.268	0.750	1.094	0.750	1.602	2.189	3.457	1.000	1.713	0.875	0.413	14,300	2,354	0.082	0.163
OCM C2082H-SER	50.80	4.0	38.1	6.8	19.1	27.8	19.1	40.7	55.6	87.8	25.4	43.5	22.2	10.5	63.73 {6,500}	10.49 {1,070}	0.037	0.074

链条选择

选择程序与标准滚子链的选择程序相同。
但应注意以下事项：
(1) 运行温度范围应在−10℃ (14°F) 到+150℃ (300°F)。
(2) 链条不应设置在有水和脱油的作业环境。

CHAIN SELECTION

The selection procedure is the same as that for standard roller chain.
But note the following:
(1) Operating temperature should be within a range of -10℃ (14°F) to +150℃ (300°F).
(2) Chain should not be exposed to water and deoiling atmosphere.

本产品样本所述技术条件若有变化恕不另行通知。
The specifications described in this catalogue are subuject to change without notice

特重载荷链条 特殊H系列
EXTRA HEAVY DUTY CHAIN SPECIAL H SERIES

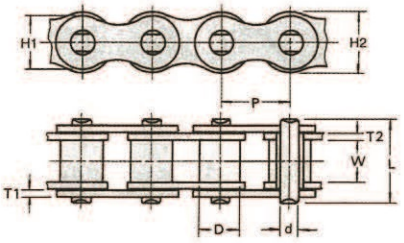

该链条设计适用于重载、结构要求紧凑的运行环境。为方便比较，提供以下ANSI标准滚子链列表。

This chain is designed for heavy duty application requiring compactness. For easy comparison, ANSI standard roller chain is listed.

单位UNIT 上方Upper:inch
下方Beneath:mm

链号 Chain No.	节距 Pitch P	滚子直径 Roller Diam. D	内节内宽 Width between L.P. W	链板 Link Plate H1	H2	T1	T2	销轴直径 Pin Diam. d	销轴 Pin L	平均抗拉强度 Average Tensile Strength Lb/kg	最大工作载荷 Max. Working Load Lb/kg	概略重量 Approx Weight Lb/ft kg/m
ANSI 35	0.375 9.525	▲ 0.200 5.08	0.189 4.8	- -	0.354 9	0.049 1.25	0.049 1.25	0.141 3.58	0.461 11.7	2,601 1,180	419 190	0.24 0.36
2H33B	0.375 9.525	▲ 0.200 5.08	0.189 4.8	0.358 9.1	0.358 9.1	0.079 2	0.079 2	0.141 3.58	0.583 14.8	3,902 1,770	728 330	0.36 0.53
ANSI 40	0.500 12.7	0.312 7.92	0.313 7.95	- -	0.472 12	0.059 1.5	0.059 1.5	0.156 3.96	0.634 16.1	4,299 1,950	860 390	0.44 0.66
HM45	0.500 12.7	0.335 8.5	0.313 7.95	0.492 12.5	0.492 12.5	0.063 1.6	0.079 2	0.177 4.5	0.697 17.7	5,952 2,700	1,146 520	0.6 0.9
HM45E	0.500 12.7	0.335 8.5	0.313 7.95	■ 0.472 12	■ 0.472 12	0.079 2	0.094 2.4	0.177 4.5	0.772 19.6	6,724 3,050	1,455 660	0.73 1.08
2H44E	0.500 12.7	0.306 7.77	0.252 6.4	■ 0.472 12	■ 0.472 12	0.059 1.5	0.079 2	0.156 3.96	0.634 16.1	5,181 2,350	1,235 560	0.52 0.78
2H45E	0.500 12.7	0.312 7.92	0.313 7.95	■ 0.472 12	■ 0.472 12	0.059 1.5	0.079 2	0.156 3.96	0.689 17.5	5,181 2,350	1,235 560	0.56 0.83
ANSI 50	0.625 15.875	0.400 10.16	0.376 9.55	- -	0.591 15	0.079 2	0.079 2	0.200 5.08	0.799 20.3	7,165 3,250	1,389 630	0.73 1.08
H525E	0.625 15.875	0.421 10.7	0.311 7.9	■ 0.614 15.6	■ 0.614 15.6	0.094 2.4	0.126 3.2	0.206 5.24	0.874 22.2	10,141 4,600	2,646 1,200	1.08 1.6
2H52	0.625 15.875	0.400 10.16	0.252 6.4	0.512 13	0.594 15.1	0.094 2.4	0.094 2.4	0.200 5.08	0.736 18.7	8,818 4,000	1,543 700	0.67 1
2H53	0.625 15.875	0.400 10.16	0.376 9.55	0.512 13	0.591 15	0.094 2.4	0.094 2.4	0.200 5.08	0.862 21.9	8,818 4,000	1,543 700	0.81 1.2
2H53S	0.625 15.875	0.400 10.16	0.376 9.55	0.512 13	■ 0.591 15	0.126 3.2	0.094 2.4	0.200 5.08	0.929 23.6	8,818 4,000	1,874 850	0.87 1.3
ANSI 60	0.750 19.05	0.469 11.91	0.500 12.7	- -	0.709 18	0.094 2.4	0.094 2.4	0.234 5.95	1.000 25.4	9,921 4,500	2,094 950	1.08 1.6
2H63	0.750 19.05	0.469 11.91	0.376 9.55	0.602 15.3	0.709 18	0.126 3.2	0.126 3.2	0.234 5.95	1.016 25.8	12,346 5,600	2,646 1,200	1.17 1.74
2H64	0.750 19.05	0.469 11.91	0.500 12.7	0.602 15.3	0.709 18	0.126 3.2	0.126 3.2	0.234 5.95	1.142 29	12,346 5,600	2,646 1,200	1.26 1.88
2H64B	0.750 19.05	▲ 0.469 11.91	0.504 12.79	0.787 20	0.787 20	0.126 3.2	0.157 4	0.295 7.5	1.236 31.4	18,188 8,250	3,384 1,535	1.68 2.5
3H63	0.750 19.05	0.469 11.91	0.376 9.55	0.709 18	0.787 20	0.126 3.2	0.126 3.2	0.234 5.95	1.016 25.8	13,007 5,900	3,351 1,520	1.34 2
4H63	0.750 19.05	0.563 14.29	0.376 9.55	■ 0.772 19.6	■ 0.772 19.6	0.126 3.2	0.157 4	0.276 7	1.071 27.2	16,314 7,400	4,034 1,830	1.73 2.58
5H63	0.750 19.05	0.563 14.29	0.376 9.55	■ 0.772 19.6	■ 0.772 19.6	0.126 3.2	0.161 4.1	0.287 7.3	1.079 27.4	17,416 7,900	4,034 1,830	1.73 2.58
H745E	0.875 22.225	0.614 15.6	0.563 14.3	■ 0.925 23.5	■ 0.925 23.5	0.157 4	0.189 4.8	0.313 7.94	1.409 35.8	23,369 10,600	5,952 2,700	2.55 3.8
H745B	0.875 22.225	▲ 0.563 14.29	0.563 14.29	0.925 23.5	0.925 23.5	0.157 4	0.189 4.8	0.354 9	1.425 36.2	26,015 11,800	4,696 2,130	2.42 3.6
H745EP	0.875 22.225	0.614 15.6	0.563 14.3	■ 0.925 23.5	■ 0.925 23.5	0.157 4	0.189 4.8	0.313 7.94	1.409 35.8	23,369 10,600	6,393 2,900	2.55 3.8
ANSI 80	1.000 25.4	0.625 15.88	0.626 15.9	- -	0.949 24.1	0.126 3.2	0.126 3.2	0.313 7.94	1.287 32.7	17,637 8,000	3,638 1,650	1.88 2.8
2H85E	1.000 25.4	0.625 15.88	0.626 15.9	■ 0.945 24	■ 0.945 24	0.126 3.2	0.157 4	0.313 7.94	1.362 34.6	21,605 9,800	5,071 2,300	2.22 3.3
3H85E	1.000 25.4	0.625 15.88	0.626 15.9	■ 0.945 24	■ 0.945 24	0.157 4	0.182 4.62	0.313 7.94	1.425 36.2	24,692 11,200	5,071 2,300	2.42 3.6
4H85E	1.000 25.4	0.625 15.88	0.626 15.9	■ 0.965 24.5	■ 0.965 24.5	0.157 4	0.182 4.62	0.326 8.28	1.472 37.4	28,440 12,900	6,173 2,800	2.62 3.9
H85B	1.000 25.4	▲ 0.625 15.88	0.626 15.9	1.047 26.6	1.047 26.6	0.189 4.8	0.220 5.6	0.394 10	1.654 42	32,408 14,700	6,305 2,860	3.09 4.6
H85	1.000 25.4	0.719 18.25	0.626 15.9	0.965 24.5	0.965 24.5	0.182 4.62	0.236 6	0.375 9.53	1.657 42.1	32,408 14,700	6,239 2,830	3.09 4.6
H85E	1.000 25.4	0.719 18.25	0.626 15.9	■ 0.965 24.5	■ 0.965 24.5	0.182 4.62	0.236 6	0.375 9.53	1.689 42.9	32,408 14,700	7,055 3,200	3.16 4.7
H955E	1.125 28.575	0.817 20.74	0.689 17.5	■ 1.098 27.9	■ 1.098 27.9	0.220 5.6	0.260 6.6	0.425 10.8	1.870 47.5	35,274 16,000	8,598 3,900	4.1 6.1
ANSI 100	1.250 31.75	0.750 19.05	0.754 19.15	- -	1.185 30.1	0.157 4	0.157 4	0.375 9.53	1.571 39.9	26,455 12,000	5,512 2,500	2.82 4.2

▲ 指套筒直径 indicates bush diameter. ■ 指直边链板 indicates straight link plate.

多数使用链条为环状。除部分规格外，没有连接。 Most of chain is used endless. No connecting is available except some sizes.

OCM 微型节距链条
OCM MINI PITCH CHAIN

OCM微型节距链条的高精密度和可信度长期以来为其带来良好的声誉。该链条广泛用于正向精密传动装置和控制装置
OCM mini pitch chain has a long standing reputation for its high precision and reliability. The chain is widely used in a positive and precision drive and control. OCM S10, the world's smallest chain, is used in various types of medical instruments.

OCM 微型链条 MINI CHAIN

链号 Chain No. S10 节距 Pitch ● 0.125inch / 3.175mm

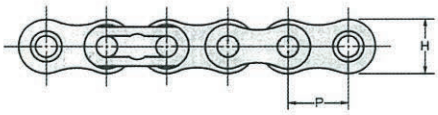

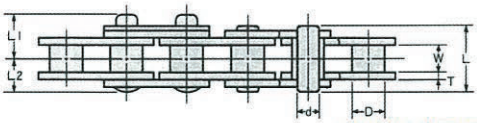

单位UNIT 上方Upper:inch
下方Beneath:mm

OCM 链号 Chain No.	节距 Pitch P	滚子直径 Roller Diam. D	内节内宽 Width between L.P. W	链板 Link Plate H	链板 Link Plate T	销轴直径 Pin Diam. d	销轴 Pin L	销轴 Pin L1	销轴 Pin L2	平均抗拉强度 Average Tensile Strength Lb/kg	概略重量 Approx Weight Lb/ft kg/m
OCMS10	0.125 3.175	0.067 1.7	0.051 1.3	0.114 2.9	0.015 0.4	0.045 1.15	0.144 3.65	0.095 2.4	0.071 1.8	220 100	0.02 0.03

1. 链条不带滚子。没有过渡链节。Chain is rollerless. Offset is not available.
2. 连接链节为特殊型式。Connecting link is special type.
注：尺寸会有变化。根据要求提供合格尺寸。Note: Dimensions subject to change. Certified dimensions furnished upon request.

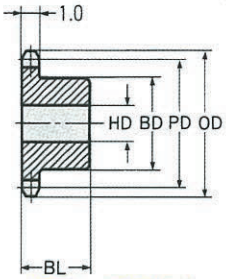

B 型 TYPE B

单位UNIT:mm

链轮齿数 No. of Teeth	齿节直径 Pitch Diam. PD	外径 Outside Diam. OD	基本孔径 Stock Bore HD	最大孔径 Max. Bore HD	轮毂直径 Hub Diam. BD	通孔长度 Length thru Bore BL	平均重量 Average Weight kg
10	10.27	11.6	3.0	4.0	6.5	7.0	0.002
11	11.27	12.7	3.0	4.5	7.0	7.0	0.002
12	12.27	13.7	3.0	5.0	8.0	8.0	0.003
13	13.27	14.7	3.0	5.5	9.0	8.0	0.004
14	14.27	15.8	3.0	6.5	10.0	8.0	0.005
15	15.27	16.8	4.0	7.0	11.0	8.0	0.006
16	16.27	17.8	4.0	8.0	12.0	8.0	0.007
17	17.28	18.8	4.0	8.0	13.0	8.0	0.009
18	18.28	19.9	4.0	9.0	14.0	8.0	0.010
19	19.29	20.9	5.0	10.0	15.0	8.0	0.011
20	20.30	21.9	5.0	10.0	16.0	8.0	0.013
21	21.30	22.9	5.0	12.0	17.0	10.0	0.018
22	22.31	23.9	5.0	12.0	18.0	10.0	0.020
23	23.32	25.0	5.0	13.0	19.0	10.0	0.022
24	24.32	26.0	5.0	14.0	20.0	10.0	0.025
25	25.33	27.0	6.0	14.0	21.0	10.0	0.026
26	26.34	28.0	6.0	14.0	22.0	10.0	0.029
27	27.35	29.0	6.0	15.0	23.0	10.0	0.032
28	28.36	30.0	6.0	15.0	24.0	10.0	0.035
29	29.37	31.0	6.0	16.0	25.0	12.0	0.045
30	30.37	32.1	6.0	16.0	25.0	12.0	0.046
31	31.38	33.1	6.0	16.0	25.0	12.0	0.046
32	32.39	34.1	6.0	16.0	25.0	12.0	0.047
33	33.40	35.1	6.0	16.0	25.0	12.0	0.047
34	34.41	36.1	6.0	16.0	25.0	12.0	0.048
35	35.42	37.1	6.0	16.0	25.0	12.0	0.048

1. 轮齿不进行感应硬化处理。Teeth of sprockets are not induction hardened.
2. 上述所示最大孔径为普通规格。根据使用情况和运行条件确定最大孔径。
The max. bore showed above is general. Please determine your max. bore in view of your application and operating conditions.
注：尺寸会有变化。根据要求提供合格尺寸。Note: Dimensions subject to change. Certified dimensions furnished upon request.

OCM 微型链条 MINI CHAIN

链号 Chain No. 15

节距 Pitch ● 0.188inch / 4.7625mm

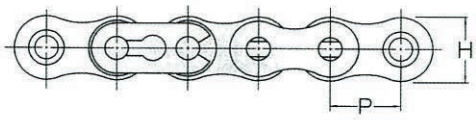

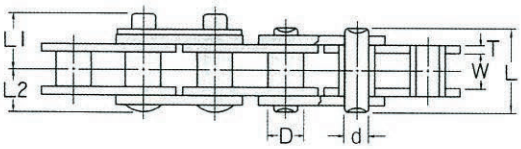

单位UNIT 上方Upper:inch
下方Beneath:mm

OCM 链号 Chain No.	节距 Pitch P	滚子直径 Roller Diam. D	内节内宽 Width between L.P. W	链板 Link Plate H	链板 Link Plate T	销轴直径 Pin Diam. d	销轴 Pin L	销轴 Pin L1	销轴 Pin L2	平均抗拉强度 Average Tensile Strength Lb/kg	概略重量 Approx Weight Lb/ft kg/m
OCM15	0.188	0.098	0.094	0.173	0.022	0.064	0.224	0.154	0.114	485	0.062
	4.7625	2.48	2.38	4.4	0.57	1.62	5.7	3.9	2.9	220	0.093

1. 链条不带滚子。没有过渡链节。Chain is rollerless. Offset is not available.
2. 连接链节为特殊型式。Connecting link is special type.
注：尺寸会有变化。根据要求提供合格尺寸。Note: Dimensions subject to change. Certified dimensions furnished upon request.

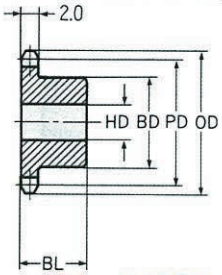

B 型 TYPE B

单位UNIT:mm

链轮齿数 No. of Teeth	齿节直径 Pitch Diam. PD	外径 Outside Diam. OD	基本孔径 Stock Bore HD	最大孔径 Max. Bore HD	轮毂直径 Hub Diam. BD	通孔长度 Length thru Bore BL	平均重量 Average Weight kg
10	15.41	17.5	4	6	10	10	0.007
11	16.90	19.0	4	7	11	10	0.008
12	18.40	20.5	4	8	12	10	0.010
13	19.90	22.0	4	9	14	10	0.014
14	21.40	23.5	6	10	15	12	0.017
15	22.91	25.0	6	12	17	12	0.022
16	24.41	26.5	6	12	18	12	0.025
17	25.92	28.0	8	14	20	14	0.032
18	27.43	29.5	8	14	22	14	0.039
19	28.93	31.0	8	15	23	14	0.044
20	30.44	32.5	8	15	24	14	0.048
21	31.95	34.0	8	17	26	14	0.057
22	33.46	35.5	8	17	27	14	0.062
23	34.98	37.5	8	17	28	14	0.067
24	36.49	39.0	8	20	30	16	0.087
25	38.00	40.5	8	20	32	16	0.099
26	39.51	42.0	10	22	33	16	0.103
27	41.02	43.5	10	25	35	16	0.116
28	42.54	45.0	10	25	36	16	0.130
29	44.05	46.5	10	25	38	16	0.138
30	45.56	48.0	10	25	39	16	0.146
31	47.07	49.5	10	25	40	18	0.173
32	48.59	51.0	10	25	40	18	0.175
33	50.10	52.5	10	25	40	18	0.177
34	51.62	54.0	10	25	40	18	0.178
35	53.13	55.5	10	25	40	18	0.180

1. 轮齿不进行感应硬化处理。Teeth of sprockets are not induction hardened.
2. 上述所示最大孔径为普通规格。根据使用情况和运行条件确定最大孔径。
The max. bore showed above is general. Please determine your max. bore in view of your application and operating conditions.
注：尺寸会有变化。根据要求提供合格尺寸。Note: Dimensions subject to change. Certified dimensions furnished upon request.

OCM 微型链条 MINI CHAIN

链号 Chain No. 25H 节距 Pitch ● 0.250inch / 6.35mm

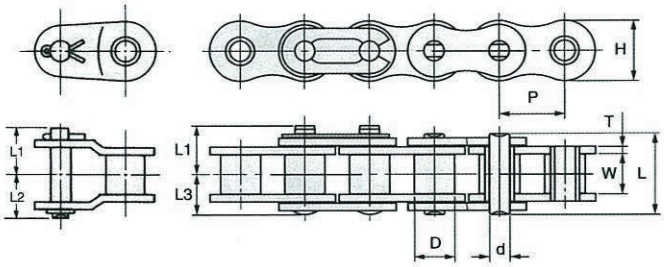

单位UNIT 上方Upper:inch
下方Beneath:mm

OCM 链号 Chain No.	节距 Pitch P	滚子直径 Roller Diam. D	内节内宽 Width between L.P. W	链板 Link Plate H	链板 Link Plate T	销轴直径 Pin Diam. d	销轴 Pin L	销轴 Pin L1	销轴 Pin L2	销轴 Pin L3	排距 Trans PItch E	平均抗拉强度 Average Tensile Strength Lb/kg	最大工作载荷 Max. Working Load Lb/kg	概略重量 Approx Weight Lb/ft kg/m
OCM25H	0.250 6.35	0.130 3.3	0.126 3.2	0.230 5.85	0.039 1.0	0.091 2.30	0.350 8.9	0.209 5.3	0.185 4.7	0.169 4.3	-	1147 520	209 95	0.107 0.16

1. 链条不带滚子。没有过渡链节。Chain is rollerless. Offset is not available.
2. 连接链节为特殊型式。Connecting link is special type.
注：尺寸会有变化。根据要求提供合格尺寸。Note: Dimensions subject to change. Certified dimensions furnished upon request.

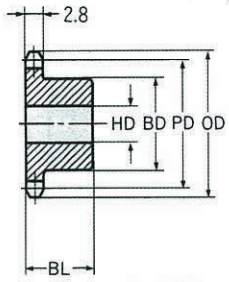

B 型 TYPE B

单位UNIT:mm

链轮齿数 No. of Teeth	齿节直径 Pitch Diam. PD	外径 Outside Diam. OD	基本孔径 Stock Bore HD	最大孔径 Max. Bore HD	轮毂直径 Hub Diam. BD	通孔长度 Length thru Bore BL	平均重量 Average Weight kg
10	20.55	23.0	6	8	13	12	0.01
11	22.54	25.0	6	9	15	12	0.02
12	24.53	27.5	6	11	17	12	0.02
13	26.53	29.5	6	13	19	12	0.03
14	28.54	31.5	8	13	20	14	0.04
15	30.54	33.5	8	15	22	14	0.04
16	32.55	35.5	8	15	24	14	0.05
17	34.56	37.5	8	17	26	14	0.06
18	36.57	39.5	8	17	28	14	0.07
19	38.58	41.5	8	20	30	16	0.09
20	40.59	43.5	8	20	32	16	0.11
21	42.61	45.5	10	25	34	16	0.12
22	44.62	47.5	10	25	36	16	0.13
23	46.63	50.0	10	25	38	16	0.14
24	48.65	52.0	10	25	40	18	0.18
25	50.66	54.0	10	25	40	18	0.18
26	52.68	56.0	10	25	40	18	0.19
27	54.70	58.0	10	25	40	18	0.19
28	56.71	60.0	10	25	40	18	0.19
29	58.73	62.0	10	25	40	18	0.20
30	60.75	64.0	10	25	40	18	0.20
31	62.77	66.0	10	25	40	18	0.21
32	64.78	68.0	10	25	40	18	0.21
33	66.80	70.0	10	25	40	18	0.22
34	68.82	72.0	10	25	40	18	0.22
35	70.84	74.0	10	25	40	18	0.23

1. 轮齿不进行感应硬化处理。Teeth of sprockets are not induction hardened.
2. 上述所示最大孔径为普通规格。根据使用情况和运行条件确定最大孔径。
The max. bore showed above is general. Please determine your max. bore in view of your application and operating conditions.
注：尺寸会有变化。根据要求提供合格尺寸。Note: Dimensions subject to change. Certified dimensions furnished upon request.

OCM BS/DIN 滚子链
OCM BS/DIN ROLLER CHAIN

BS/DIN 滚子链
BS/DIN ROLLER CHAIN

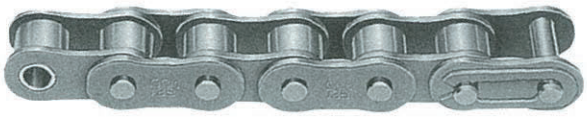

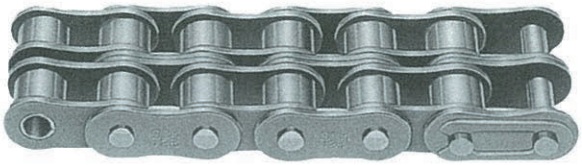

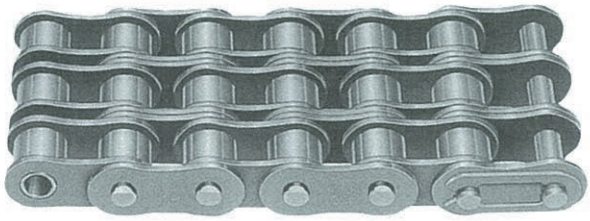

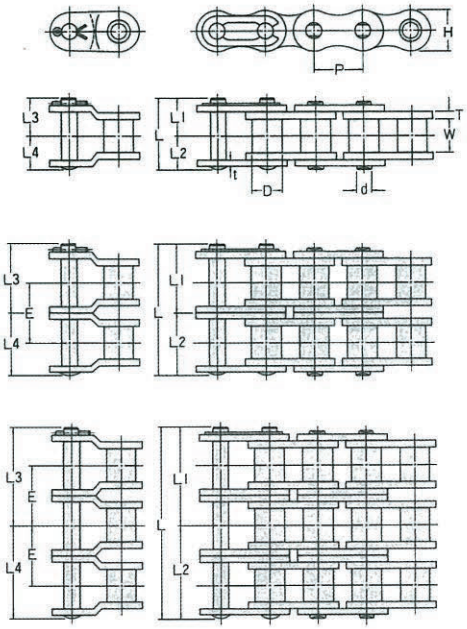

单位UNIT :mm

OCM 链号 Chain No.	ISO-B 链号 ISO-B No.	节距 Pitch P	滚子直径 Roller Diam. D	内节内宽 Width Between L.P. W	链板 Link Plate H	T	t	销轴直径 Pin Diam. d	销轴 Pin L	L1	L2	L3	L4	排距 Trans Pitch E	最低抗拉强度 Minimum Tension Strength kN	Kg	概略重量 Approx Weight Kg/m
04	-	6.00	4	2.8	5	0.6	0.6	1.85	7.3	3.1	4.2	-	-	-	3.04	310	0.21
05B	05B	8.00	5	3.2	7.1	0.75	0.75	2.3	8.7	4.8	3.9	4.8	4.1	-	4.61	470	0.18
06B									13.4	7.2	6.2	7.6	6.6		8.92	910	0.37
06B-2	06B	9.525	6.35	5.72	8.2	1.32	1.05	3.28	23.7	12.35	11.35	12.75	11.75	10.24	16.97	1730	0.70
06B-3									34	17.5	16.5	17.85	16.85		24.91	2540	1.05
08B									18.3	9.8	8.5	10.6	8.5		17.85	1820	0.71
08B-2	08B	12.70	8.51	7.85	11.8	1.62	1.62	4.45	32.2	16.85	15.45	17.5	15.5	13.92	31.38	3200	1.30
08B-3									46.2	23.8	22.4	24.5	22.4		45.11	4600	2.00
10B									21.2	11.6	9.6	11.7	9.7		22.26	2270	0.95
10B-2	10B	15.875	10.16	9.8	14.7	1.62	1.62	5.08	37.9	19.95	17.95	20	18	16.59	44.52	4540	1.80
10B-3									54.5	28.25	26.25	28.3	26.3		66.78	6810	2.70
12B									24.3	13.1	11.2	13.6	11.3		28.93	2950	1.30
12B-2	12B	19.05	12.07	11.7	16.1	1.88	1.88	5.72	43.8	22.85	20.95	23.35	21.05	19.46	57.86	5900	2.50
12B-3									63.3	32.6	30.7	33.1	30.8		86.79	8850	3.80
16B									38.2	20.2	18	21.7	20.2		63.74	6500	2.90
16B-2	16B	25.40	15.88	17.05	21.08	4.1	3.2	8.28	70	36	34	37.7	36.1	31.88	112.78	11500	5.60
16B-3									101.8	51.9	49.9	53.6	52.1		170.642	17400	8.20
20B									44.4	23.7	20.7	24.6	23		98.07	10000	3.80
20B-2	20B	31.75	19.05	19.6	26.4	4.4	3.5	10.19	80.9	41.95	38.95	42.85	41.25	36.45	176.52	18000	7.40
20B-3									117.3	60.2	57.1	61.05	59.45		259.88	26500	11.80
24B									58.7	32	26.7	32.9	30.7		166.71	17000	7.10
24B-2	24B	38.10	25.4	25.4	33.4	5.9	4.9	14.61	107.2	56.3	50.9	57.1	54.9	48.36	294.2	30000	13.90
24B-3									155.5	80.4	75.1	81.3	79.1		446.2	45500	20.80
28B									70.2	37.7	32.5	38.9	36.6		200.06	20400	8.60
28B-2	28B	44.45	27.94	31	36.7	7.4	6.3	15.88	129.8	67.45	62.35	68.7	66.4	59.56	360.88	36800	16.60
28B-3									189.4	97.3	92.1	98.5	96.2		539.37	55000	25.50
32B									71.1	37.7	33.4	38.4	36.6		254.97	26000	9.60
32B-2	32B	50.80	29.2	31	41.9	6.9	6.3	17.79	129.7	67	62.7	67.7	65.9	58.55	460.91	47000	18.7
32B-3									188.2	96.25	91.95	97	95.2		686.47	70000	27.8

BS/DIN 不锈钢滚子链
BS/DIN STAINLESS ROLLER CHAIN

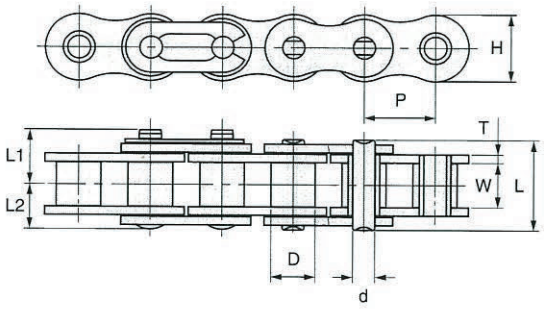

材料: 304不锈钢 Material:304 stainless steel
单位UNIT: mm

OCM 链号 Chain No.	节距 Pitch P	内节内宽 Width between L.P. W	链板 Link Plate H	滚子直径 Roller Diam. D	链板 Link Plate T	销轴直径 Pin Diam. d	销轴 Pin L	销轴 Pin L1	销轴 Pin L2	最大工作载荷 Max. Working Load kgf/kN	概略重量 Approx Weight kg/m
04	6.00	2.80	4.90	4.00	0.60	1.85	7.35	-	-	6/0.06	0.11
05B	8.00	7.80	7.10	5.00	0.75	2.30	7.80	-	-	12/0.12	0.18
06B	9.525	5.72	8.20	6.35	1.27/1.0	3.28	13.75	7.25	6.50	27/0.26	0.39
08B	12.70	7.75	12.00	8.51	1.50	4.45	18.40	10.05	8.35	45/0.44	0.55
10B	15.875	9.65	14.70	10.16	1.50	5.08	19.10	11.25	9.55	70/0.70	0.94
12B	19.05	11.68	16.10	12.07	1.8/1.7	5.72	22.20	13.00	11.10	105/1.00	1.25
16B	25.40	17.02	20.30	15.88	4.0/3.2	8.26	35.10	20.60	17.60	210/2.06	2.59

16B的连接链节为开口销式。06B为直边链板。Connecting link for 16B is cotter. 06B is straight link plate.

BS/DIN 镀镍滚子链
BS/DIN NICKEL PLATED ROLLER CHAIN

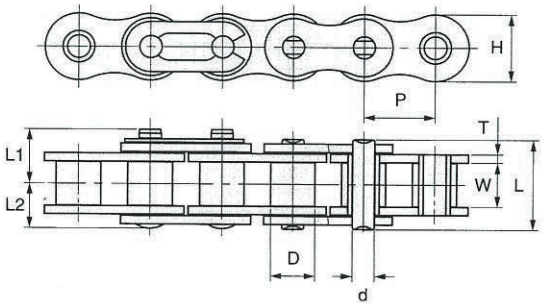

单位UNIT:mm

OCM 链号 Chain No.	ISO-B 链号 ISO-B No.	节距 Pitch P	滚子直径 Roller Diam. D	内节内宽 Width between L.P. W	链板 Link Plate H	链板 Link Plate T	链板 Link Plate t	销轴直径 Pin Diam. d	销轴 Pin L	销轴 Pin L3	销轴 Pin L1	销轴 Pin L2	最低抗拉强度 Minimum Tension Strength Kg	概略重量 Approx Weight kg/m
04	-	6.00	4.00	2.80	5.00	0.60	0.60	1.85	7.30	3.10	-	-	310	0.12
05B	05B	8.00	5.00	3.20	7.10	0.75	0.75	2.30	8.70	3.90	-	-	470	0.18
06B	06B	9.525	6.35	5.72	8.20	1.32	1.05	3.28	13.40	7.20	7.60	6.60	910	0.37
08B	08B	12.70	8.51	7.85	11.80	1.62	1.62	4.45	18.30	9.80	10.60	8.50	1820	0.71
10B	10B	15.875	10.16	9.80	14.70	1.62	1.62	5.08	21.20	11.60	11.70	9.70	2270	0.95
12B	12B	19.05	12.07	11.70	16.10	1.88	1.88	5.72	24.30	13.10	13.60	11.30	2950	1.30
16B	16B	25.40	15.88	17.05	21.08	4.10	3.20	8.28	38.20	20.20	21.70	20.20	6500	2.90
20B	20B	31.75	19.02	19.60	26.00	4.40	3.50	10.16	43.85	23.70	25.15	23.00	10000	3.80
24B	24B	38.10	25.4	25.40	33.40	5.90	4.90	14.61	58.75	32.00	32.45	30.70	17000	7.10
28B	28B	44.45	27.94	31.00	36.70	7.40	6.30	15.88	70.45	37.70	39.10	36.30	20400	8.60
32B	32B	50.80	29.21	31.00	41.90	6.90	6.30	17.79	71.10	37.70	39.50	36.60	26000	9.60

t为外链板厚度
t is pin link plate thickness.

BS/DIN 自润滑链条
BS/DIN SELUBE CHAIN

BS/DIN SELUBE 自润滑链条

OCM SELUBE 自润滑链条，其良好的耐磨寿命，高于标准滚子链 8 到 30 倍。OCM 还生产 ANSI 和 BS/DIN SELUBE自润滑链条。SELUBE 自润滑链条与 ANSI 和 BS/DIN 标准链条可进行互换。
为防腐蚀，销轴镀镍，链板烧黑处理。

运行温度范围在-10℃ (14°F) ~ 150℃ (302°F)
运行速度保持在150m (49ft) /分

优点：

SELUBE 自润滑链条可用于润滑禁止或不得污染产品的作业条件。
无润滑作业可保持环境清洁。
维修费用低。
载荷与标准滚子链的载荷几乎相同。
耐热达150℃。

BS/DIN SELUBE CHAIN

OCM SELUBE CHAIN, being self-lubricating, provides excellen wear life,8 to 30 times better than standard roller chain. ANSI and BS/DIN SELUBE CHAINs are available. SELUBE CHAIN is interchangeable with ANSI and BS/DIN standard roller chain. To prevent corrosion, pins are nickel plated and link plates are blackened.

Operating temperature within a range of -10℃ (14° F) to150℃ (302° F)
Operating speed to be kept below 150m(490 feet) per minute

Advantages

SELUBE CHAIN can be used where lubrication is prohibited or products should not be contaminated.
No lubrication makes environment clean.
Maintenance costs are reduced.
Strength is almost the same as that of standard roller chain.
Heat resistance up to 150℃.

烧黑处理的外链板
Blackened Link Plate

镀镍销轴
Nickel Plated Pin

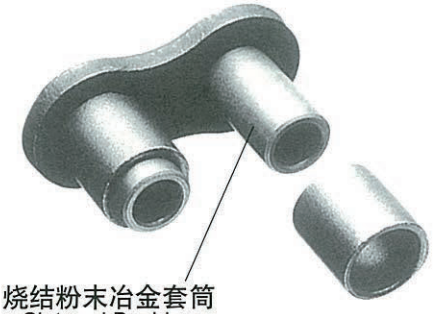

烧结粉末冶金套筒
Sintered Bushing

单位UNIT mm

OCM 链号 Chain No.	Pitch 节距 P	Roller Diam. 滚子直径 D	Width Between L.P. 内节内宽 W	Link Plate 链板 H1	H2	T1	T2	Pin Diam. 销轴直径 d	Pin 销轴 L	L1	L2	极限抗拉强度 Ultimate Tension Strength kN	概略重量 Approx Weight Kg
OCM 08BJ-SER	12.70	8.50	7.85	10.9	11.8	1.56	2.00	4.45	17.70	10.20	8.90	19.4	0.77
OCM 10BJ-SER	15.875	10.16	9.80	13.7	14.7	1.56	2.00	5.08	20.20	12.00	10.10	26.0	1.03
OCM 12BJ-SER	19.05	12.07	11.70	16.1	16.1	1.82	2.40	5.72	23.60	13.60	11.80	35.3	1.40

本产品样本中所述技术条件若有变化恕不另行通知。根据要求提供合格规格。
The Specifications described in this catalogue are subject to change without notice. Certified specifications will be furnished upon request.

不锈钢滚子链
STAINLESS ROLLER CHAIN

1. 不锈钢滚子链SUS系列
该链条采用304(奥氏体)不锈钢制成。耐腐蚀性好，磁导系数低。
该链条对普通酸、碱和水有良好的耐腐蚀性。耐热。

2. 不锈钢滚子链SAC系列
该链条采用316(奥氏体)不锈钢制成。耐腐蚀性高于SUS系列，无磁性。采用的卡簧片和开口销为304不锈钢。
耐热。

3. 不锈钢滚子链SPH系列
该链条的销轴、套筒和滚子均采用600系列析出硬化不锈钢材料制成，其链板为304不锈钢。采用的卡簧片和开口销为304不锈钢，有磁性，耐磨性好，工作载荷为SUS系列的1.5倍。

4. 超级特殊保护膜处理链条
链条表面烧结有一层坚硬的保护膜。该链条的防腐蚀性高于镀镍链条。抗拉强度稍低于标准滚子链。应避免在有防酸和防止直接接触食品要求的作业条件下使用该链条。如果必须使用耐盐水、耐雨水等腐蚀链条时，应选用SUPER SHIELD超级特殊保护膜处理链条。

5. 镀镍链条
该链条是由特殊镀镍部件装配而成。链条耐腐蚀性好，外表美观，适用于食品机械、办公机械等。

6. 耐寒链条K系列
该链条与标准滚子链采用同一规格，但可在－30℃～60℃的温度范围使用。

1. Stainless Roller Chain SUS Series
This chain is made of 304 (austenitic) stainless steel. This chain has excellent corrosive resistance and very low magnetic permeability.
This chain is good for general acid, alkali and water. Heat resistance.

2. Stainless Roller Chain SAC Series
This chain is made of 316 (austenitic) stainless steel. This is better in corrosion resistance than SUS Series and non-magnetic. Spring clips and cotters used are made of 304 stainless steel. Heat resistance.

3. Stainless Roller Chain SPH Series
The pin, bush and roller of this chain are made of 600 Series precipitation hardened stainless steel with link plate of 304 stainless steel. Spring clips and cotters used are made of 304 stainless steel. Magnetic.
Better wear resistance. The working load of this chain is 1.5 times SUS Series.

4. Super Shield Chain
A tough protective coating is baked onto the chain. This chain is better than nickel plated chain in corrosion resistance. The tensile strength is slightly lower than standard roller chain. Please avoid using this chain for the applications requiring resistance to acids and in direct contact with food. When you need a chain for corrosion resistance to salt water, rain water, etc, use SUPER SHIELD.

5. Nickel Plated Chain
Assembled from special nickel plated components. This chain with good corrosion resistance and beautiful surface appearance is used for food machinery, office machinery, etc.

6. Cold Resistance Chain K Series
This chain is identical in dimension with standard roller chain but can be used at temperature of -30˚C ~ 60˚C.

ANSI不锈钢滚子链
ANSI STAINLESS ROLLER CHAIN

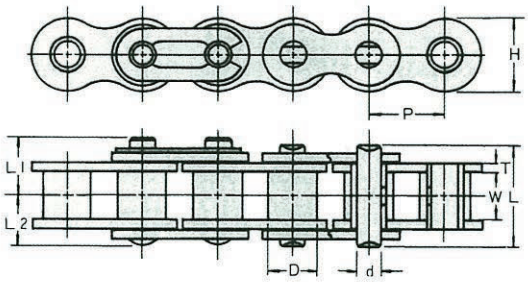

单位UNIT 上方Upper: inch
下方Beneath: mm

OCM 链号 Chain No.	节距 Pitch P	滚子直径 Roller Diam. D	内节内宽 Width between L.P. W	链板 Link Plate H	链板 Link Plate T	销轴直径 Pin Diam. d	销轴 Pin L	销轴 Pin L1	销轴 Pin L2	最大工作载荷 Max Working Load Lb/kgf	概略重量 Approx Weight Lb/ft kg/m
OCM 15SUS	0.188 4.7625	0.098 2.48	0.094 2.38	0.173 * 4.40	0.022 0.57	0.064 1.62	0.224 5.70	0.154 3.90	0.114 2.90	11 5	0.062 0.093
OCM 25SUS	0.25 6.35	0.13 3.30	0.126 3.20	0.23 * 5.85	0.03 0.75	0.091 2.30	0.307 7.80	0.189 4.80	0.154 3.90	26 12	0.087 0.13
OCM 35SUS	0.375 9.525	0.2 5.08	0.189 4.80	0.354 * 9.00	0.049 1.25	0.141 3.58	0.465 11.80	0.264 6.70	0.24 6.10	66 30	0.249 0.37
OCM 40SUS	0.50 12.70	0.312 7.92	0.313 7.95	0.472 12.00	0.059 1.50	0.156 3.96	0.654 16.60	0.402 10.20	0.323 8.20	99 45	0.403 0.6
OCM 50SUS	0.625 15.875	0.4 10.16	0.376 9.55	0.591 15.00	0.079 2.00	0.2 5.08	0.819 20.80	0.48 12.20	0.406 10.30	165 75	0.632 0.94
OCM 60SUS	0.75 19.05	0.469 11.91	0.5 12.70	0.709 18.00	0.094 2.40	0.234 5.95	1.02 25.90	0.598 15.20	0.5 12.70	231 105	0.941 1.4
OCM 80SUS	1.00 25.40	0.625 15.88	0.626 15.90	0.945 24.00	0.126 3.20	0.313 7.94	1.299 33.00	0.76 19.30	0.65 16.50	397 180	1.68 2.5
OCM 100SUS	1.25 31.75	0.75 19.05	0.754 19.15	1.181 30.00	0.157 4.00	0.375 9.53	1.701 43.20	0.909 23.10	0.791 20.10	573 260	2.553 3.8
OCM 120SUS	1.50 38.10	0.875 22.23	1.006 25.55	1.417 36.00	0.189 4.80	0.437 11.11	2.114 53.70	1.118 28.40	0.996 25.30	882 400	3.696 5.5

80及80以上的链节为开口销式。
*指套筒直径。

Connecting link for 80 and above is cotter type.
* indicates bush diameters.

单位UNIT 上方Upper: inch
下方Beneath: mm

OCM 链号 Chain No.	节距 Pitch P	滚子直径 Roller Diam. D	内节内宽 Width between L.P. W	链板 Link Plate H	链板 Link Plate T	销轴直径 Pin Diam. d	销轴 Pin L	销轴 Pin L1	销轴 Pin L2	最大工作载荷 Max Working Load Lb/kgf	概略重量 Approx Weight Lb/ft kg/m
OCM 40SPH	0.50 12.7	0.312 7.92	0.313 7.95	0.472 12	0.059 1.5	0.156 3.96	0.654 16.6	0.402 10.2	0.323 8.2	154 70	0.403 0.6
OCM 50SPH	0.625 15.875	0.4 10.16	0.376 9.55	0.591 15	0.079 2	0.2 5.08	0.819 20.8	0.48 12.2	0.406 10.3	231 105	0.632 0.94
OCM 60SPH	0.75 19.05	0.469 11.91	0.5 12.7	0.709 18	0.094 2.4	0.234 5.95	1.02 25.9	0.598 15.2	0.5 12.7	353 160	0.941 1.4
OCM 80SPH	1.00 25.4	0.625 15.88	0.626 15.9	0.945 24	0.126 3.2	0.313 7.94	1.299 33	0.76 19.3	0.65 16.5	595 270	1.68 2.5

单位UNIT 上方Upper: inch
下方Beneath: mm

OCM 链号 Chain No.	节距 Pitch P	滚子直径 Roller Diam. D	内节内宽 Width between L.P. W	链板 Link Plate H	链板 Link Plate T	销轴直径 Pin Diam. d	销轴 Pin L	销轴 Pin L1	销轴 Pin L2	最大工作载荷 Max Working Load Lb/kgf	概略重量 Approx Weight Lb/ft kg/m
OCM 40SAC	0.50 12.7	0.312 7.92	0.313 7.95	0.472 12	0.059 1.5	0.156 3.96	0.654 16.6	0.402 10.2	0.323 8.2	99 45	0.403 0.6
OCM 50SAC	0.63 15.875	0.4 10.16	0.376 9.55	0.591 15	0.079 2	0.2 5.08	0.819 20.8	0.48 12.2	0.406 10.3	165 75	0.632 0.94
OCM 60SAC	0.75 19.05	0.469 11.91	0.5 12.7	0.709 18	0.094 2.4	0.234 5.95	1.02 25.9	0.598 15.2	0.5 12.7	231 105	0.941 1.4
OCM 80SAC	1.00 25.4	0.625 15.88	0.626 15.9	0.945 24	0.126 3.2	0.313 7.94	1.299 33	0.76 19.3	0.65 16.5	397 180	1.68 2.5

不锈钢双节距滚子链
STAINLESS DOUBLE PITCH ROLLER CHAIN

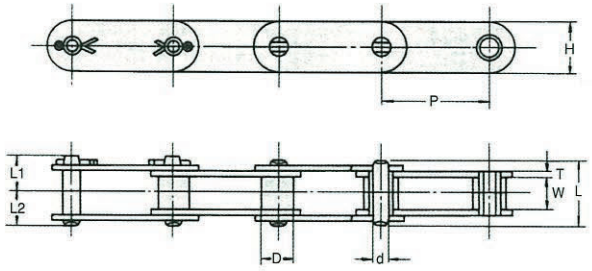

小滚子型
SMALL ROLLER

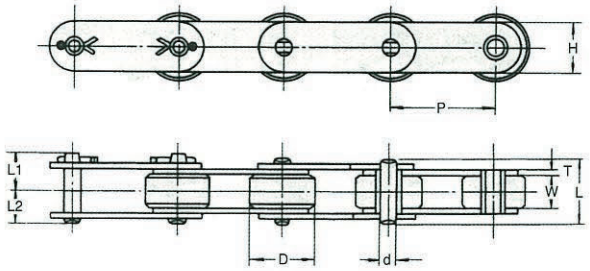

大滚子型
LARGE ROLLER

小滚子型 SMALL ROLLER

单位UNIT 上方Upper: inch
下方Beneath: mm

OCM 链号 Chain No.	节距 Pitch P	滚子直径 Roller Diam. D	内节内宽 Width between L.P. W	链板 Link Plate H	链板 Link Plate T	销轴直径 Pin Diam. d	销轴 Pin L	销轴 Pin L1	销轴 Pin L2	最大工作载荷 Max Working Load Lb/kgf	概略重量 Approx Weight Lb/ft kg/m
C2040SUS	1.000	0.312	0.313	0.472	0.059	0.156	0.654	0.402	0.323	99	0.34
	25.4	7.92	7.95	12	1.5	3.96	16.6	10.2	8.2	45	0.51
C2050SUS	1.250	0.4	0.376	0.591	0.079	0.2	0.819	0.476	0.409	165	0.58
	31.75	10.16	9.55	15	2	5.08	20.8	12.1	10.4	75	0.87
C2060HSUS	1.500	0.469	0.5	0.677	0.126	0.234	1.142	0.669	0.563	231	1.01
	38.1	11.91	12.7	17.2	3.2	5.95	29	17	14.3	105	1.51
C2080HSUS	2.000	0.625	0.626	0.945	0.157	0.313	1.437	0.839	0.709	397	1.79
	50.8	15.88	15.9	24	4	7.94	36.5	21.3	18	180	2.66

大滚子型 LARGE ROLLER

单位UNIT 上方Upper: inch
下方Beneath: mm

OCM 链号 Chain No.	节距 Pitch P	滚子直径 Roller Diam. D	内节内宽 Width between L.P. W	链板 Link Plate H	链板 Link Plate T	销轴直径 Pin Diam. d	销轴 Pin L	销轴 Pin L1	销轴 Pin L2	最大工作载荷 Max Working Load Lb/kgf	概略重量 Approx Weight Lb/ft kg/m
C2042SUS	1.000	0.625	0.313	0.472	0.059	0.156	0.654	0.402	0.323	99	0.58
	25.4	15.88	7.95	12	1.5	3.96	16.6	10.2	8.2	45	0.87
C2052SUS	1.250	0.75	0.376	0.591	0.079	0.2	0.819	0.476	0.409	165	0.91
	31.75	19.05	9.55	15	2	5.08	20.8	12.1	10.4	75	1.35
C2062HSUS	1.500	0.875	0.5	0.677	0.126	0.234	1.142	0.669	0.563	231	1.47
	38.1	22.23	12.7	17.2	3.2	5.95	29	17	14.3	105	2.19
C2082HSUS	2.000	1.125	0.626	0.945	0.157	0.313	1.437	0.839	0.709	397	2.47
	50.8	28.58	15.9	24	4	7.94	36.5	21.3	18	180	3.68

注：C2040/C2042~C2060H/C2062H为卡簧片式，C2080H/C2082H及其以上为开口销式。
Note: Connecting link for C2040/C2042 to C2060H/C2060H is spring clip while C2080H/C2082H and above is cotter type.

OCM 链号 Chain No.		最大工作载荷 Max working load kgf	最大工作载荷 Max working load Lbs	OCM 链号 Chain No.		最大工作载荷 Max working load kgf	最大工作载荷 Max working load Lbs
C2040-SAC	C2042-SAC	45	99	C2040-SPH	C2042-SPH	70	154
C2050-SAC	C2052-SAC	75	165	C2050-SPH	C2052-SPH	105	231
C2060H-SAC	C2062H-SAC	105	231	C2060H-SPH	C2062H-SPH	160	353
C2080H-SAC	C2082H-SAC	180	397	C2080H-SPH	C2082H-SPH	270	595

SAC和SPH的尺寸与SUS相同。
Dimensions of SAC and SPH are the same as SUS.

不锈钢空心销轴链条
STAINLESS HOLLOW PIN CHAIN

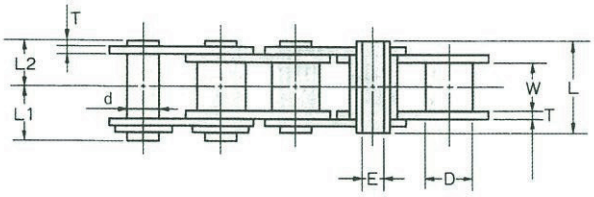

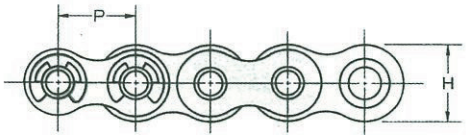

无滚子链条
CHAIN IS ROLLERLESS

单位UNIT 上方Upper: inch
下方Beneath: mm

OCM 链号 Chain No.	节距 Pitch P	滚子直径 Roller Diam. D	内节内宽 Width between L.P. W	销轴直径 Pin Diam. d	排距 Trans Pitch E (MIN)	销轴 Pin L	L1	L2	链板 Link Plate H	T	容许载荷 Allowable Load Lb/kgf	概略重量 Approx Weight Lb/ft kg/m
40HP SUS	0.500	0.312	0.313	0.222	0.157	0.63	0.362	0.315	0.472	0.059	99	0.34
	12.7	7.92	7.95	5.65	4	16	9.2	8	12	1.5	45	0.51
50HP SUS	0.625	0.4	0.376	0.284	0.202	0.799	0.451	0.4	0.591	0.079	165	0.56
	15.875	10.16	9.55	7.21	5.12	20.3	11.45	10.15	15	2	75	0.84
60HP SUS	0.750	0.469	0.5	0.327	0.236	1	0.559	0.5	0.709	0.094	231	0.83
	19.05	11.91	12.7	8.3	6	25.4	14.2	12.7	18	2.4	105	1.23
80HP SUS	1.000	0.625	0.626	0.433	0.315	1.287	0.703	0.644	0.949	0.126	397	1.48
	25.4	15.88	15.9	11	8	32.7	17.85	16.35	24.1	3.2	180	2.2

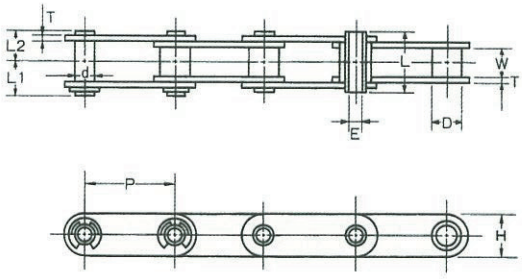

无滚子型
TYPE ROLLERLESS

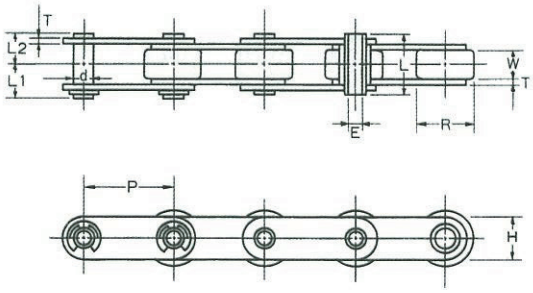

大滚子型
TYPE LARGE ROLLER

单位UNIT 上方Upper: inch
下方Beneath: mm

OCM 链号 Chain No.	节距 Pitch P	滚子直径 Roller Diam. D	R	内节内宽 Width between L.P. W	销轴直径 Pin Diam. d	E (MIN)	销轴 Pin L	L1	L2	链板 Link Plate H	T	容许载荷 Allowable Load Lb/kgf	概略重量 Approx Weight Lb/ft	kg/m
C2040HP-C2042HP SUS	1.000	0.312	0.625	0.313	0.222	0.157	0.63	0.362	0.315	0.472	0.059	99	0.3	0.53
	25.4	7.92	15.88	7.95	5.65	4	16	9.2	8	12	1.5	45	0.45	0.79
C2050HP-C2052HP SUS	1.250	0.4	0.75	0.376	0.284	0.202	0.799	0.451	0.4	0.591	0.079	165	0.5	0.8
	31.75	10.16	19.05	9.55	7.21	5.12	20.3	11.45	10.15	15	2	75	0.74	1.19
C2060HP-C2062HP SUS	1.500	0.469	0.875	0.5	0.327	0.236	1	0.559	0.5	0.677	0.094	231	0.69	1.15
	38.1	11.91	22.23	12.7	8.3	6	25.4	14.2	12.7	17.2	2.4	105	1.02	1.71
C2080HP-C2082HP SUS	2.000	0.625	1.125	0.626	0.433	0.315	1.287	0.703	0.644	0.945	0.126	397	1.28	1.98
	50.8	15.88	28.58	15.9	11	8	32.7	17.85	16.35	24	3.2	180	1.91	2.94

超级特殊保护膜处理链条
SUPER SHIELD CHAIN

OCM提供的SUPER SHIELD CHAIN超级特殊保护膜处理链条为耐腐蚀链条，适用于可直接接触水的作业环境。其耐腐蚀性仅次于OCM不锈钢滚子链，并几乎保留标准滚子链的强度。
链条表面烧结有一层坚硬的保护膜，其耐腐蚀性可达250℃。如果必须使用耐盐水、雨水等腐蚀的链条时，应选用SUPER SHIELD超级特殊保护膜处理链条。
涉及与食品接触的链条时，或在有耐酸腐蚀要求的其他运行环境下，使用OCM不锈钢滚子链。
试验结果---见右图所示。
盐水喷淋后的链条。该试验按照JIS Z2371日本工业标准实施。
(1) OCM SUPER SHIELD CHAIN超级特殊保护膜处理链条
(2) 竞争者的相当产品
(3) OCM 镀镍链条

SUPER SHIELD CHAIN by OCM is a corrosion resistant chain for areas exposed directly to water. Second only to OCM's stainless steel roller chain in corrosion resistance, SUPER SHIELD CHAIN also retains almost the strength of standard roller chain.
A tough protective coating is baked onto the chain, providing corrosion resistance up to 250°C. When you need a chain for corrosion resistance to salt water, rain water, etc., use SUPER SHIELD CHAIN.
When addressing contact with food or other applications requiring resistance to acids, use OCM's stainless steel roller chain products.
Test Result - See the pictures shown on the right -
Chain was sprayed with salt water. The test was made in accordance with JIS Z2371, Japan Industrial Standard.
(1) OCM SUPER SHIELD CHAIN
(2) Competitor's Equivalent
(3) OCM Nickel Plated Chain

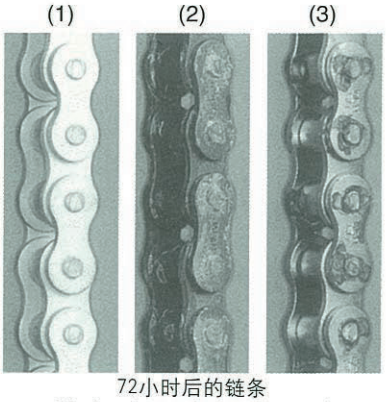

72小时后的链条
Chain after 72 hours elapsed

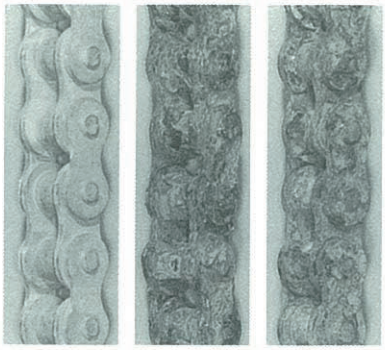
504小时后的链条
Chain after 504 hours elapsed

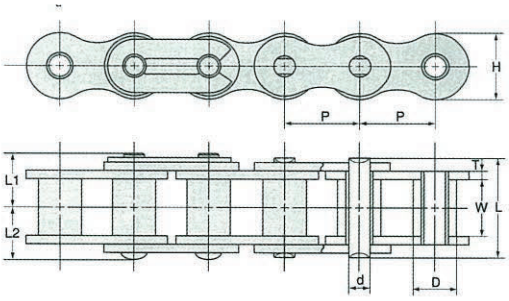

单位UNIT 上方Upper: inch
下方Beneath: mm

	OCM 链号 Chain No.	节距 Pitch P	滚子直径 Roller Diam. D	内节内宽 Width between L.P. W	链板 Link Plate H	链板 Link Plate T	销轴直径 Pin Diam. d	销轴 Pin L	销轴 Pin L1	销轴 Pin L2	极限抗拉强度 Ultimate Tensile Strength Lb/kgf	最大工作载荷 Max. Working Load Lb/kgf	概略重量 Approx Weight Lb/ft kg/m
ANSI滚子链 ANSI ROLLER CHAIN	OCM35 SC	0.375 9.525	0.200 5.080	0.189 4.80	0.355 9.00	0.049 1.25	0.141 3.58	0.461 11.7	0.264 6.7	0.240 6.1	1,985 900	419 190	0.242 0.36
	OCM40 SC	0.500 12.70	0.313 7.940	0.313 7.95	0.473 12.00	0.059 1.50	0.156 3.96	0.634 16.1	0.382 9.7	0.319 8.1	3,175 1,440	860 390	0.443 0.66
	OCM50 SC	0.625 15.875	0.400 10.16	0.376 9.55	0.591 15.00	0.079 2.00	0.200 5.08	0.800 20.3	0.477 12.1	0.410 10.4	5.358 2,430	1,389 630	0.713 1.08
	OCM60 SC	0.750 19.05	0.469 11.91	0.500 12.70	0.709 18.00	0.095 2.40	0.234 5.95	1.001 25.4	0.579 14.7	0.500 12.7	7,641 3,465	2,095 950	1.067 1.6
	OCM80 SC	1.000 25.40	0.625 15.88	0.627 15.90	0.949 24.10	0.126 3.20	0.313 7.94	1.289 32.7	0.741 18.8	0.709 18.0	14,289 6,480	3,638 1,650	1.868 2.8
	OCM100 SC	1.250 31.75	0.750 19.05	0.755 19.15	1.185 30.10	0.158 4.00	0.375 9.53	1.698 43.1	0.925 23.5	0.787 20.0	21,434 9,720	5,513 2,500	2.801 4.2
	OCM120 SC	1.500 38.10	0.876 22.23	1.007 25.55	1.425 36.20	0.189 4.80	0.438 11.11	2.124 53.9	1.119 28.4	0.989 25.1	29,967 13,590	7,277 3,300	4.135 6.2
BS滚子链 BS ROLLER CHAIN	OCM06B SC	0.375 9.525	0.250 6.35	0.225 5.72	0.323 8.20	0.052 1.32	0.129 3.28	0.528 13.4	0.283 7.2	0.244 6.2	1,805 819	- -	0.246 0.37
	OCM08B SC	0.500 12.70	0.335 8.51	0.309 7.85	0.464 11.80	0.063 1.62	0.175 4.45	0.720 18.3	0.386 9.8	0.335 8.5	3,611 1,638	- -	0.473 0.71
	OCM10B SC	0.625 15.875	0.400 10.16	0.386 9.80	0.579 14.70	0.063 1.62	0.200 5.08	0.835 21.2	0.457 11.6	0.378 9.6	4.504 2,043	- -	0.633 0.95
	OCM12B SC	0.750 19.05	0.475 12.07	0.460 11.70	0.634 16.10	0.074 1.88	0.225 5.72	0.956 24.3	0.516 13.1	0.441 11.2	5,854 2,655	- -	0.867 1.3
	OCM16B SC	1.000 25.40	0.625 15.88	0.671 17.05	0.830 21.08	0.161 4.10	0.326 8.28	1.504 38.2	0.795 20.2	0.709 18.0	12,899 5,850	- -	1.934 2.9
	OCM20B SC	1.250 31.75	0.750 19.05	0.771 19.60	1.039 26.40	0.173 4.40	0.401 10.19	1.748 44.4	0.933 23.7	0.815 20.7	19,845 9,000	- -	2.535 3.8
	OCM24B SC	1.500 38.10	1.000 25.40	1.000 25.40	1.315 33.40	0.232 5.90	0.575 14.61	2.311 58.7	1.260 32.0	1.051 26.7	33,736 15,300	- -	4.736 7.1

供货范围：ANSI: 25H ~ 240, BS: 06B ~ 32B ANSI:25H thru 240, BS: 06B thru 32B is available

镀镍滚子链
NICKEL PLATED ROLLER CHAIN

OCM镀镍链条成本低，耐腐蚀性高于钢制链条。OCM提供装配前用或装配后用镀镍链板。
ANSI 25~200及双节距滚子链均配有镀镍链板。
OCM nickel plated chains provide stronger corrosion resistance than steel chains at low cost. Nickel plate prior to assembly or after assembly is available.
Plating is available for ANSI 25 through 200 and double pitch roller chains.

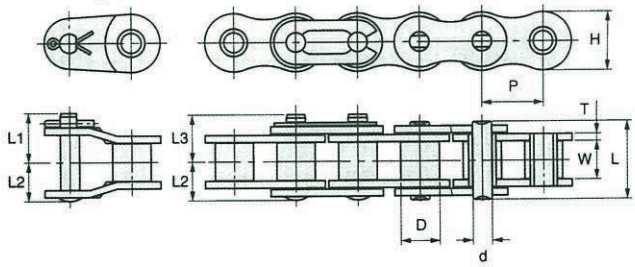

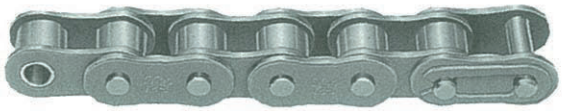

单位UNIT 上方Upper: inch
下方Beneath: mm

OCM 链号 Chain No.	节距 Pitch P	滚子直径 Roller Diam. D	内节内宽 Width between L.P. W	链板 Link Plate H	链板 Link Plate T	销轴直径 Pin Diam. d	销轴 Pin L	销轴 Pin L1	销轴 Pin L2	销轴 Pin L3	排距 Trans Pitch E	平均抗拉强度 Average Tensile Strength Lb/kgf	最大工作载荷 Max. Working Load Lb/kgf	概略重量 Approx Weight Lb/ft kg/m
S10N	0.125 3.175	0.067 1.7	0.051 1.3	0.114 2.9	0.016 0.4	0.045 1.15	0.144 3.65	- -	0.077 1.95	0.096 2.45	- -	220 100	44 20	0.02 0.03
15N	0.188 4.765	0.098 2.48	0.094 2.38	0.173 4.4	0.022 0.57	0.064 1.62	0.224 5.7	- -	0.114 2.9	0.154 3.9	- -	485 220	88 40	0.06 0.09
25N	0.250 6.35	0.13 3.3	0.126 3.2	0.23 5.85	0.03 0.75	0.091 2.3	0.307 7.8	0.189 4.8	0.161 4.1	0.189 4.8	0.252 6.4	1058 480	154 70	0.09 0.13
35N	0.375 9.525	0.2 5.08	0.189 4.8	0.354 9	0.049 1.25	0.141 3.58	0.461 11.7	0.264 6.7	0.252 6.4	0.264 6.7	0.398 10.1	2601 1180	419 190	0.25 0.37
40N	0.500 12.7	0.312 7.92	0.313 7.95	0.472 12	0.059 1.5	0.156 3.96	0.634 16.1	0.402 10.2	0.319 8.1	0.382 9.7	0.567 14.4	4299 1950	860 390	0.40 0.6
50N	0.625 15.875	0.4 10.16	0.376 9.55	0.591 15	0.079 2	0.2 5.08	0.799 20.3	0.476 12.1	0.409 10.4	0.476 12.1	0.713 18.1	7165 3250	1389 630	0.63 0.94
60N	0.750 19.05	0.469 11.91	0.5 12.7	0.709 18	0.094 2.4	0.234 5.95	1 25.4	0.598 15.2	0.5 12.7	0.579 14.7	0.898 22.8	9921 4500	2094 950	0.94 1.4
80N	1.000 25.4	0.625 15.88	0.626 15.9	0.949 24.1	0.126 3.2	0.313 7.94	1.287 32.7	0.776 19.7	0.642 16.3	0.74 18.8	1.154 29.3	17637 8000	3638 1650	1.81 2.7
100N	1.250 31.75	0.75 19.05	0.754 19.15	1.185 30.1	0.157 4	0.375 9.53	1.697 43.1	0.925 23.5	0.787 20	0.925 23.5	1.409 35.8	26455 12000	5512 2500	2.82 4.2

低温链条
CHAIN FOR LOW TEMPERATURE

该链条适合温度范围 30˚C (-22˚F) ~ 60˚C (140˚F)。
该链条尺寸与ANSI标准滚子链相同。
This chain is built for a temperature of - 30˚C(-22˚F) to 60˚C(140˚F).
The chain is dimensionally the same as ANSI standard roller chain.

单位UNIT 上方Upper: inch
下方Beneath: mm

OCM 链号 Chain No.	节距 Pitch P	滚子直径 Roller Diam. D	内节内宽 Width between L.P. W	链板 Link Plate H	链板 Link Plate T	销轴直径 Pin Diam. d	销轴 Pin L	销轴 Pin L1	销轴 Pin L2	销轴 Pin L3	排距 Trans Pitch E	平均抗拉强度 Average Tensile Strength Lb/kgf	最大工作载荷 Max. Working Load Lb/kgf	概略重量 Approx Weight Lb/ft kg/m
40K	0.50 12.7	0.312 7.92	0.313 7.95	0.472 12	0.059 1.5	0.156 3.96	0.634 16.1	0.402 10.2	0.319 8.1	0.382 9.7	0.567 14.4	4299 1950	683 310	0.403 0.6
50K	0.625 15.875	0.4 10.16	0.376 9.55	0.591 15	0.079 2	0.2 5.08	0.799 20.3	0.476 12.1	0.409 10.4	0.476 12.1	0.713 18.1	7165 3250	1102 500	0.632 0.94
60K	0.75 19.05	0.469 11.91	0.5 12.7	0.709 18	0.094 2.4	0.234 5.95	1 25.4	0.598 15.2	0.5 12.7	0.579 14.7	0.898 22.8	9921 4500	1676 760	0.941 1.4
80K	1.00 25.4	0.625 15.88	0.626 15.9	0.949 24.1	0.126 3.2	0.313 7.94	1.287 32.7	0.776 19.7	0.642 16.3	0.74 18.8	1.154 29.3	17637 8000	2910 1320	1.814 2.7
100K	1.25 31.75	0.75 19.05	0.754 19.15	1.185 30.1	0.157 4	0.375 9.53	1.697 43.1	0.925 23.5	0.787 20	0.925 23.5	1.409 35.8	26455 12000	4409 2000	2.822 4.2
120K	1.50 38.1	0.875 22.23	1.006 25.55	1.425 36.2	0.189 4.8	0.437 11.11	2.106 53.5	1.118 28.4	1.071 27.2	0.988 25.1	1.787 45.4	37038 16800	5820 2640	4.166 6.2

OCM 树脂链条
OCM PLASTIC CHAIN

PLAMATE树脂链条
PLAMATE CHAIN

PLAMATE树脂链条是由树脂内链节与不锈钢链板和销轴(PS)、或与镀镍链板和销轴(PN)组合而成。
该链条无需润滑、干净、重量轻。
适用温度为-10˚C～ 70˚C。最大链速应低于70 m/min。没有过渡链节。使用节数为偶数。
该链条可在ANSI标准链轮上运行。

Plamate chain is made up of plastic roller link with either stainless link plate and pin (PS) or nickel plated link plate and pin (PN).
No lubrication, clean and light in weight.
Usable in temperature up to 70˚C from -10˚C. The max chain speed should be less than 70m/min. No offset is available. Use even number of pitches.
Plamate can operate on ANSI standard sprockets.

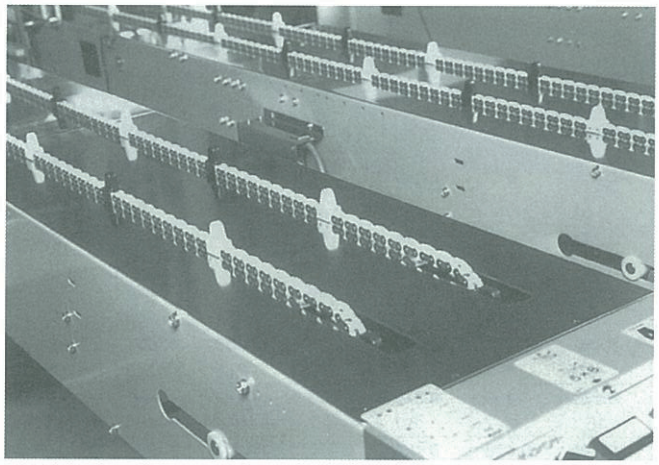

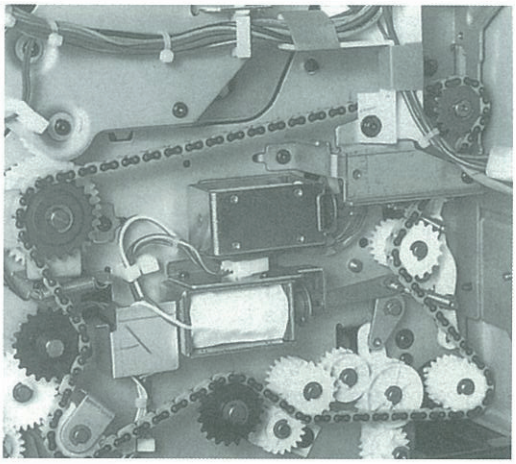

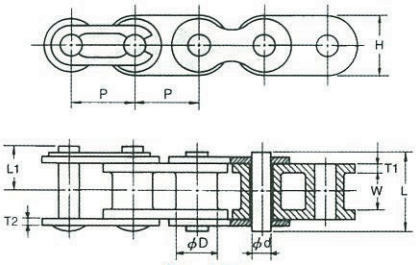

PN、PS型
TYPE PN & PS

单位UNIT 上方Upper: inch
下方Beneath: mm

OCM 链号 Chain No.	节距 Pitch P	滚子直径 Roller Diam. D	内节内宽 Width between L.P. W	链板 Link Plate H	T1	T2	销轴直径 Pin Diam. d	销轴 Pin L2	L3	平均抗拉强度 Average Tensile Strength Lb/kgf	容许载荷 Allowable Load Lb/kgf	概略重量 Approx Weight Lb/ft kg/m
OCM 15PS-PN	0.188 4.7625	0.098 2.48	0.094 2.38	0.173 4.4	0.055 1.40	0.022 0.57	0.064 1.62	0.291 7.4	0.185 4.7	106 48	15 7	0.037 0.056
OCM 25PS-PN	0.250 6.35	0.130 3.30	0.126 3.2	0.236 6.0	0.059 1.5	0.030 0.75	0.091 2.30	0.362 9.2	0.213 5.4	143 65	20 9	0.067 0.10
OCM 35PS-PN	0.375 9.525	0.200 5.08	0.189 4.8	0.354 9.0	0.091 2.3	0.049 1.25	0.141 3.58	0.551 14.0	0.319 8.1	243 110	40 18	0.147 0.22
OCM 40PS-PN	0.500 12..70	0.312 7.92	0.313 7.95	0.472 12.0	0.062 1.6	0.059 1.5	0.156 3.96	0.654 16.6	0.382 9.7	551 250	93 42	0.213 0.32
OCM 50PS-PN	0.625 15.875	0.400 10.16	0.376 9.55	0.591 15.0	0.094 2.4	0.079 2.00	0.200 5.08	0.839 21.3	0.496 12.6	794 360	159 72	0.400 0.60
OCM 60PS-PN	0.750 19.05	0.469 11.91	0.500 12.70	0.709 18.0	0.126 3.2	0.094 2.40	0.234 5.95	1.075 27.3	0.606 15.4	1,257 570	207 94	0.574 0.86

材料 Material:

	链板 Link plate		销轴 Pin		内链节 Roller Link	
PN	碳钢镀镍	Carbon steel Nickel plated	合金钢镀镍	Alloy steel Nickel plated	树脂	Plastic
PS	SUS304不锈钢	Stainless steel SUS 304	SUS304不锈钢	Stainless steel SUS 304	树脂	Plastic

带附板的PLAMATE树脂链条
PLAMATE CHAIN WITH ATTACHMENT

该链条可在ANSI标准链轮上运行。
Chain can operate on ANSI standard sprockets.

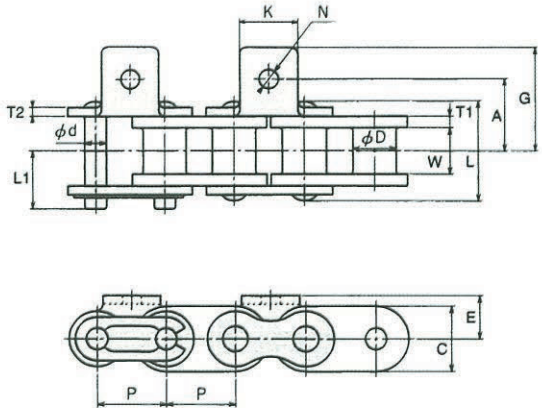

A-1型
TYPE A-1

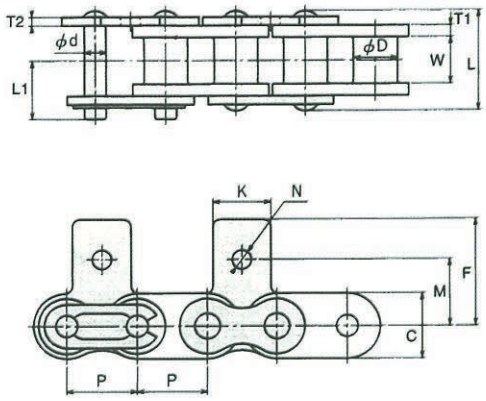

SA-1型
TYPE SA-1

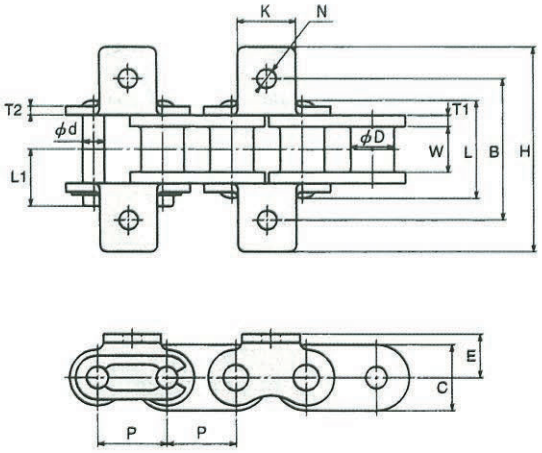

K-1型
TYPE K-1

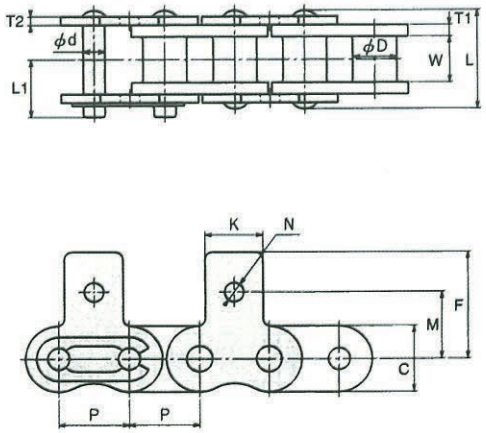

SA-1型
TYPE SK-1

单位UNIT 上方Upper: inch
下方Beneath: mm

OCM 链号 Chain No.	A型 A TYPE					K型 K TYPE		SA SK型 SA SK TYPE		每块附板 附加重量 Lb/kg Additional Weight per one att Lb/kg	
	K	N	A	E	G	B	H	M	F	A. SA	K. SK
OCM 25PS-PN	0.22	0.134	0.309	0.187	0.417	0.618	0.835	0.313	0.459	0.0007	0.0013
	5.6	3.4	7.85	4.75	10.6	15.7	21.2	7.95	11.65	0.0003	0.0006
OCM 35PS-PN	0.311	0.134	0.411	0.25	0.545	0.823	1.091	0.374	0.579	0.0018	0.0035
	7.9	3.4	10.45	6.35	13.85	20.9	27.7	9.5	14.7	0.0008	0.0016
OCM 40PS-PN	0.374	0.142	0.5	0.315	0.691	1	1.382	0.5	0.75	0.0022	0.0044
	9.5	3.6	12.7	8	17.55	25.4	35.1	12.7	19.05	0.001	0.002
OCM 50PS-PN	0.5	0.205	0.638	0.406	0.921	1.276	1.843	0.628	0.994	0.0088	0.0176
	12.7	5.2	16.2	10.3	23.4	32.4	46.8	15.95	25.25	0.004	0.008
OCM 60PS-PN	0.626	0.205	0.776	0.469	1.12	1.551	2.24	0.721	1.155	0.0154	0.0309
	15.9	5.2	19.7	11.9	28.45	39.4	56.9	18.3	29.33	0.007	0.014

注：没有过渡链节。使用节数为偶数。
附板只能设置在外链节上。

Note: Offset is not available. Use even number of pitches.
Attachment is placed only on outside link.

PLACURVE侧弯式树脂链条
PLACURVE CHAIN

Placurve侧弯式树脂链条是由树脂和不锈钢销轴制成，可侧弯。
该链条无需润滑、重量轻、干净、低噪音。
适于输送瓶类、纸袋、小型产品和食品加工。
该链条可在ANSI标准链轮上运行。
运行温度：-10˚C ~ 70˚C。
链速应低于60 m/min。
材料：聚缩醛
PC40S-20型无侧翼，适于直线运行。

Placurve chain, made of plastic and stainless steel pin, can sideflex.
No lubrication, light in weight, clean and less noise.
Suitable for conveying bottles, paper bags, small products, food processing.
Chain can operate on ANSI standard sprockets.
Operatable temperature: -10˚C~70˚C
Chain speed should be less than 60M/min.
Material: Polyacetal
PC40S-20 has no wing and is for straight line running.

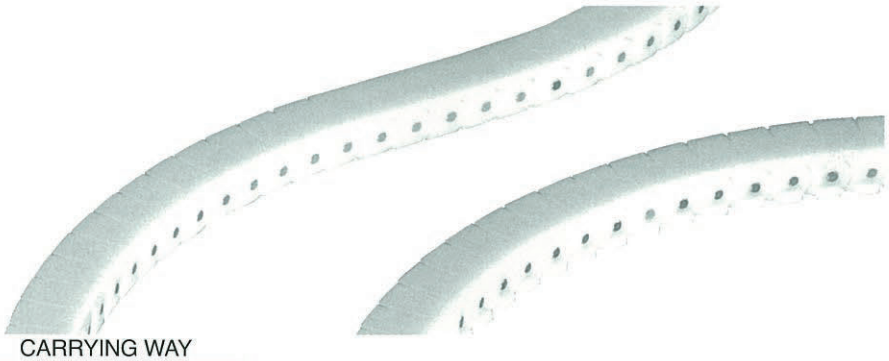

■运送侧 CARRYING WAY

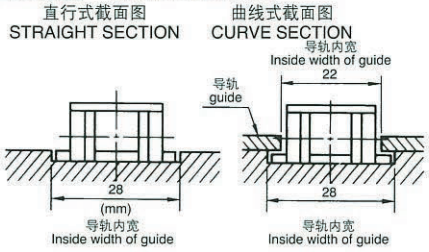

■折回侧 RETURN WAY

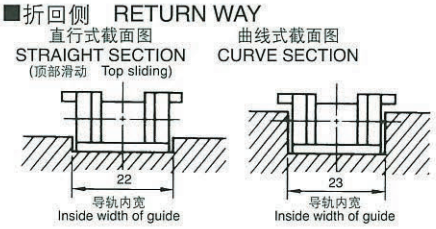

■运送侧 CARRYING WAY

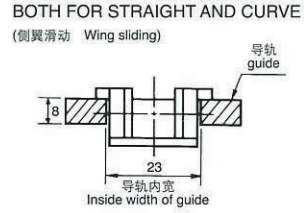

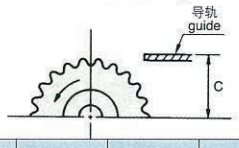

$$C = \frac{\text{链轮齿节直径 Pitch diam. of sprocket}}{2} = -5.0$$

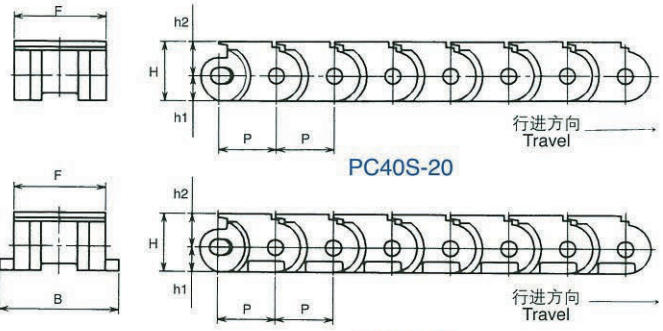

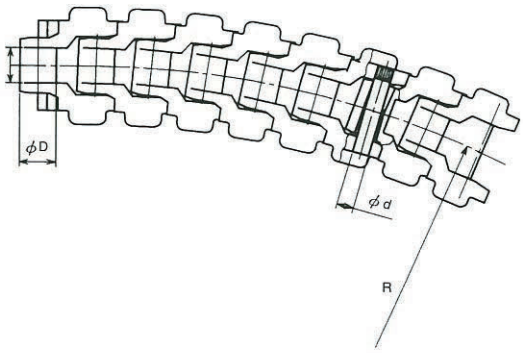

单位UNIT 上方Upper: inch
下方Beneath: mm

OCM 链号 Chain No.	节距 Pitch P	滚子直径 Roller Diam. D	内节内宽 Width between L.P. W	链板 Link Plate h1	链板 Link Plate h2	链板 Link Plate H	销轴直径 Pin Diam. d	F	链板 Link Plate T	B	最小侧弯半径 Min Sideflex Radius R	最大工作载荷 Max Working Load Lb/kgf	概略重量 Approx Weight Lb/ft kg/m
PC40-20	0.5 12.7	0.312 7.92	0.313 7.95	0.217 5.5	0.295 7.5	0.512 13	0.141 3.58	0.787 20	0.098 2.5	1.024 26	7.874 200	105.821 48	0.229 0.34
PC40S-20	0.5 12.7	0.312 7.92	0.313 7.95	0.217 5.5	0.295 7.5	0.512 13	0.141 3.58	0.787 20	- -	- -	(200)	105.821 48	0.223 0.33

直行式树脂链条
STRAIGHT RUNNING PLASTIC CHAIN

PD链条是由白色聚缩醛和18-8不锈钢销轴制成，为直行式链条。可在ANSI标准链轮上运行。运行温度为-10˚C～70˚C。链速应低于60 m/min。

PD chain, made of polyacetal white and 18-8 stainless steel pin, is straight running chain. The chain can operate on standard ANSI sprockets. Operating temperature is -10˚C ~ 70˚C. Chain speed should be less than 60M/min.

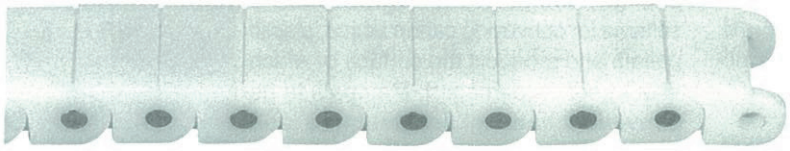

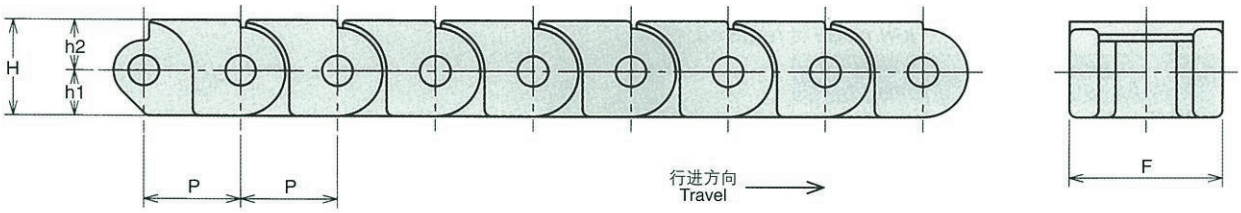

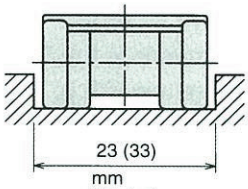

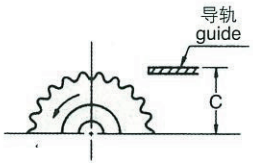

$$C = \frac{\text{链轮齿节直径 Sprocket pitch diameter}}{2} = \begin{matrix}-6.0\\(8.0)\end{matrix}$$

单位UNIT 上方Upper: inch
下方Beneath: mm

OCM 链号 Chain No.	节距 Pitch P	滚子直径 Roller Diam. D	内节内宽 Width between L.P. W	链板 Link Plate h1	链板 Link Plate h2	链板 Link Plate H	销轴直径 Pin Diam. d	F	最大工作载荷 Max Working Load Lb/kgf	概略重量 Approx Weight Lb/ft kg/m
PD40-20	0.5 12.7	0.312 7.92	0.313 7.95	0.236 6	0.264 6.7	0.5 12.7	0.156 3.96	0.787 20	99 45	0.249 0.37
PD60-30	0.75 19.05	0.469 11.91	0.5 12.7	0.335 8.5	0.346 8.8	0.681 17.3	0.235 5.98	1.181 30	198 90	0.531 0.79

PLALINK树脂链条
PLALINK CHAIN

不锈钢或钢制外链板与树脂一同成型。外链板看上如同涂有树脂层。Plalink Chain树脂链条开发用于外链板顶部输送物品。
该链条具有钢制链条的强度和树脂的低摩擦的特点，适于输送纸盒箱、塑料托盘及表面不得损伤的物品。需要输送的物品可暂时堆积和停放。
该链条特别适用于树脂强度不足、要求树脂表面平滑和噪音低的运行环境。

Stainless or steel outside link plates are molded together with plastic. It looks like outside link plates coated with plastic. Plalink Chain is developed to convey materials on the top of outside link plates. As Plalink has the advantage of steel strength and plastic lower friction, it is suitable for conveying carton boxes, plastic pallets and products the surface of which should not be damaged. Materials to be conveyed can be accumulated and stopped momentarily.
It is especially suitable for applications where the strength of plastic is insufficient, the advantage of plastic smoothness and low noise is required.

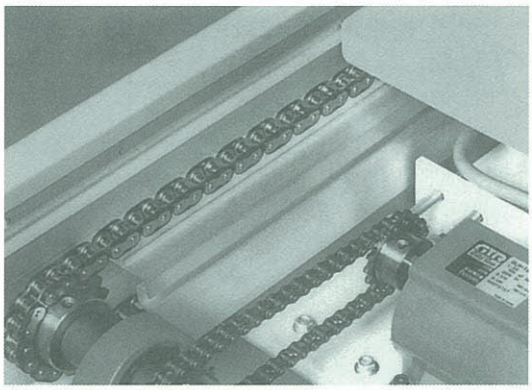

链条类型 Type of Chain	链号 Chain No.
镀镍链条：N Nickel Plated Chain: N	PLK40N
不锈钢链条：SUS Stainless Steel Chain: SUS	PLK40SUS
钢制自润滑链条：SER Steel Selflube Chain: SER	PLK40N-SER

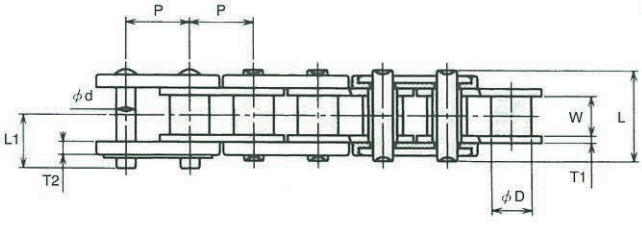

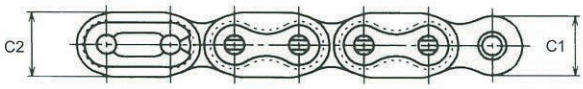

适用温度：-10˚C ~ 70˚C
最大链速：30m/min及其以下
推荐速度：15m/min及其以下
链轮最低齿数：13
树脂颜色：白和黑

Usable temperature: -10˚C to 70˚C
Max chain speed: 30m/min and below.
Recommended 15m/min. and below
Sprockets: The minimum number of teeth is 13.
Plastic color: white and black.

单位UNIT: mm

OCM 链号 Chain No. N型 N TYPE	SUS型 SUS TYPE	N–SER型 N-SER TYPE	节距 Pitch P	滚子直径 Roller Diam. D	内节内宽 Width between L.P. W	销轴 Plate C1	C2	T1	T2	销轴 Pin d	L	L1
OCM PLK40N	PLK40SUS	PLK40N-SER	12.7	7.92	7.95	12	13	1.5	2.6	3.96	18.3	10.9
OCM PLK50N	PLK50SUS	PLK50N-SER	15.875	10.16	9.55	15	16	2	3.1	5.08	22.6	13.3
OCM PLK60N	PLK60SUS	PLK60N-SER	19.05	11.91	12.7	18	19.2	2.4	3.8	5.95	28.2	16.2

N.N-SER型 N.N-SER TYPE OCM 链号 Chain No.	最大容许拉伸强度 Max Allowable Tension kN(kgf)	SUS型 SUS TYPE OCM 链号 Chain No.	最大容许拉伸强度 Max Allowable Tension kN(kgf)	每米最大载荷 Max Load per Meter kg/m	概略重量 Approx Weight kg/m
OCM PLK40N OCM PLK40N-SER	2.26(230) 2.26(230)	OCM PLK40SUS	0.44(45)	15	0.65
OCM PLK50N OCM PLK50N-SER	3.53(360) 3.53(360)	OCM PLK50SUS	0.74(75)	20	1.09
OCM PLK60N OCM PLK60N-SER	5.10(520) 5.10(520)	OCM PLK60SUS	1.03(105)	30	1.62

	PLK40	PLK50	PLK60
C(最小) C(min)	8	10	11.5

如果链条阻碍链轮轮毂，"C"尺寸应为上述尺寸。
If chain may interfere with the hub of sprockets, "C" dimension should be as shown above.

CT型顶部布铗链条
CT TYPE CLIP TOP CHAIN

在链条销轴伸出部位揿扣树脂顶铗。链条包在树脂顶铗内。因树脂顶铗无开口，异物不易从树脂顶铗之间进入。顶部布铗链条非常适于要求有钢制链条强度和平滑树脂表面的运行环境，使其可输送重物，防止输送物损伤。
碳钢链条：CT-30-A
镀镍碳钢链条：CT40N-U
不锈钢链条(SUS304)：CT40SUS-E
自润滑链条：CT60SER-A
树脂顶铗类型：
A：聚缩醛（白色）：一般输送用
U：聚氨脂（半透明）：防止输送物品滑落
E：电子导体聚酰胺：防止输送物品起电
适用温度：−10˚C ~ 70˚C
（聚氨脂：−10˚C ~ 50˚C）
最大链速：30m/min.
（推荐链速：15m/min.及其以下）
链轮最低齿数：13

Plastic tops are snapped on extended pins of chain. The chain is enclosed with plastic tops. As there is no opening on plastic tops, it makes foreign objects difficult to go into between plastic tops.
Clip top chain is well suitable for applications where the strength of steel chain and the smooth surface of plastic are required, making it possible to convey heavy loads and prevent materials to be conveyed from damaging.
Carbon steel chain : CT-30-A
Nickel plated carbon steel chain : CT40N-U
Stainless steel chain (SUS304) : CT40SUS-E
Selflube steel chain : CT60SER-A
Type of plastic top :
A : Polyacetal (White) for general conveyance
U: Polyurethane (semi transparent) for slip-resistant conveyance
E : Electro conductive polyamide for preventing materials to be conveyed from electrification.
Usable temperature : -10˚C to 70˚C
(Polyurethane : -10˚C to 50˚C)
Max chain speed : 30m/min.
(Recommend : 15m/min and slower)
Minimum number of teeth of sprockets : 13

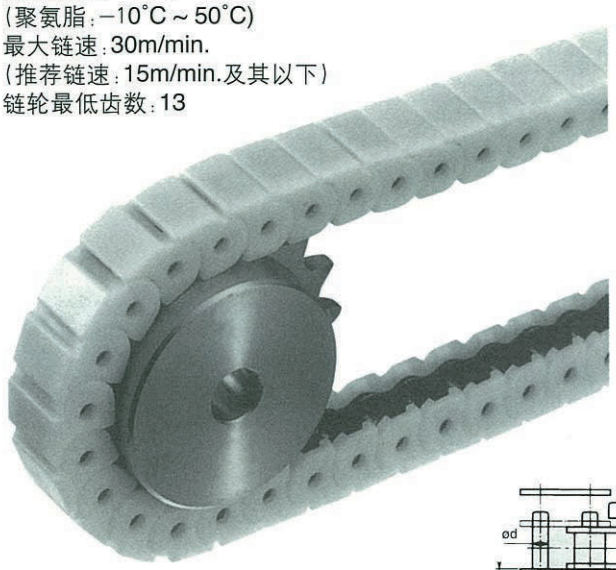

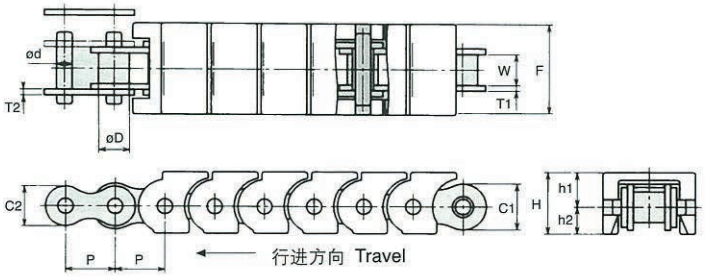

单位UNIT: mm

OCM 链号 Chain No. 碳钢 Carbon Steel	N型 N Type	SUS型 SUS Type	SER型 SER Type	节距 Pitch P	滚子直径 Roller Diam. D	内节内宽 Width between L.P. W	链板 Link Plate C1	C2	T1	T2	销轴直径 Pin Diam. d	顶铗 Clip Top h1	h2	H	F
OCM CT30	CT30N			9.525	6.35	5.72	8.2	8.2	1.32	1	3.28	7.5	5.5	13	17.3
OCM CT40	CT40N	CT40SUS	CT40SER	12.7	7.92	7.95	12	10.4	1.5	1.5	3.96	9	7	16	23.5
OCM CT60	CT60N	CT60SUS	CT60SER	19.05	11.91	12.7	18	15.3	2.4	2.4	5.95	13.5	10.5	24	35.5

碳钢N-SER型 CARBON STEEL N. SER TYPE OCM 链号 Chain No.	最大容许拉伸强度 Max Allowable Tension kN(kgf)	SUS型 SUS TYPE OCM 链号 Chain No.	最大容许拉伸强度 Max Allowable Tension kN(kgf)	每米最大载荷 Max Load per Meter kg/m	概略重量 Approx Weight kg/m
OCM CT30 OCM CT30N	1.47(150)		-	3	0.55
OCM CT40 OCM CT40N OCM CT40SER	2.75(280)	CT40SUS	0.44(45)	5	0.85
OCM CT60 OCM CT60N OCM CT60SER	6.28(640)	CT60SUS	1.03(105)	10	1.95

	CT30	CT40	CT60
C(最小) C(min)	7	8.5	12.5

如果链条阻碍链轮轮毂，"C"尺寸应为上述尺寸。
If chain may interfere with the hub of sprockets, "C" dimension should be as shown above.

双节距PLALINK树脂链条
DOUBLE PITCH PLALINK CHAIN

双节距Plalink树脂链条是由每个带有树脂链板和碳钢链板的外链节构成。平滑的树脂可防止输送物品损伤。碳钢链板保持钢质强度。

Plalink chain is made up of each outside link with plastic plate and carbon steel plate. Smoothness of plastic prevents products conveyed from being damaged. Carbon steel plates keep a steel strength.

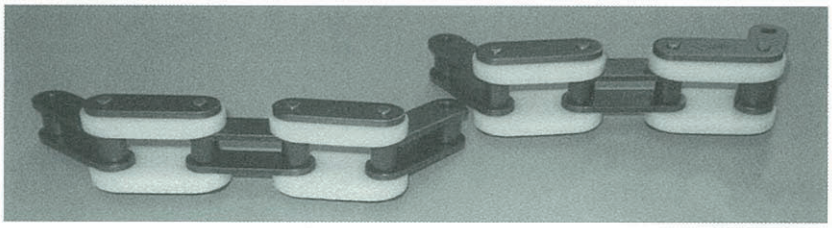

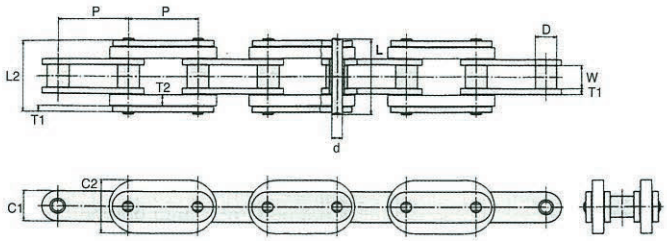

单位UNIT 上方Upper: inch
下方Beneath: mm

OCM 链号 Chain No.	节距 Pitch P	滚子直径 Roller Diam. D	内节内宽 Width between L.P. W	链板 Link Plate C1	C2	T1	T2	销轴直径 Pin Diam. d	销轴 Pin L	L2	最大容许强度 Max Allowable Tension Lb/kgf	最大载荷 Max Load per ft/Lb per m/kgf	概略重量 Approx Weight Lb/ft kg/m
PLKC2060H	1.5 38.1	0.469 11.91	0.5 12.7	0.677 17.2	1.181 30	0.126 3.2	0.236 6	0.234 5.95	1.634 41.5	1.543 39.2	767 348	16.79 25	1.076 1.6

带树脂滚子的链条(聚缩醛)
Chain with plastic roller (Polyacetal)

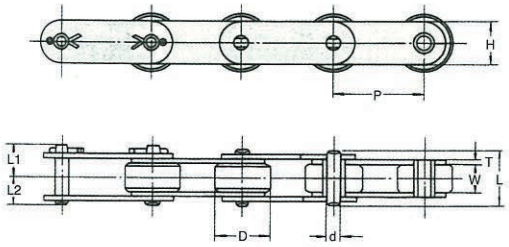

单位UNIT 上方Upper: inch
下方Beneath: mm

OCM 链号 Chain No.	节距 Pitch P	滚子直径 Roller Diam. D	内节内宽 Width between L.P. W	链板 Link Plate H	T	销轴直径 Pin Diam. d	销轴 Pin L	L1	L2	平均抗拉强度 Average Tensile Strength Lb/kgf	容许载荷 Allowable Load Lb/kgf	滚子容许载荷 Allowable Load of Roller Lb/kgf	重量 Weight Lb/ft kg/m
C2042	1.000 25.40	0.625 15.88	0.313 7.95	0.472 12.0	0.059 1.5	0.156 3.96	0.634 16.1	0.319 8.1	0.382 9.7	4.300 1.950	99 45	44 20	0.334 0.50
C2052	1.250 31.75	0.750 19.05	0.376 9.55	0.591 15.0	0.079 2.0	0.200 5.08	0.799 20.3	0.409 10.4	0.476 12.1	7.056 3.200	165 75	66 30	0.547 0.82
C2062H	1.500 38.10	0.875 22.23	0.500 12.7	0.677 17.2	0.126 3.2	0.234 5.95	1.130 28.7	0.563 14.3	0.650 16.5	9.812 4.450	232 105	110 50	0.987 1.48
C2082H	2.000 50.80	1.125 28.58	0.626 15.9	0.945 24.0	0.157 4.0	0.313 7.94	1.413 35.9	0.709 18.0	0.839 21.3	16.538 7.500	397 180	198 90	1.734 2.60

销轴带尖齿的鱼类输送链条
Fish conveying chain with sharp pointed pin

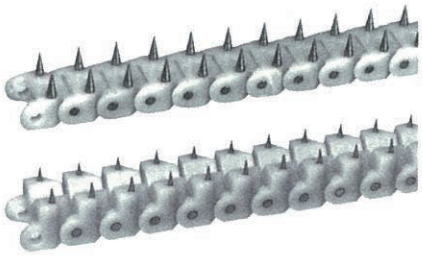

BL 系列板式链条
BL SERIES LEAF CHAIN

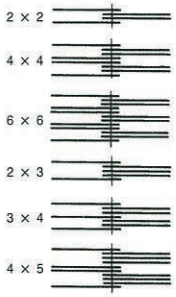

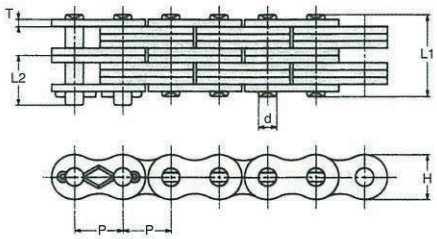

单位UNIT: mm

OCM 链号 Chain No.	节距 Pitch P	链板组合 Lacing	链板 Link Plate H	链板 Link Plate T	销轴直径 Pin Diam. d	销轴 Pin L1	销轴 Pin L2	最低抗拉强度 Minimum Strength Tensile kN	最低抗拉强度 Minimum Strength Tensile kgf	概略重量 Approx Weight kg/m	孔径(最小) Hole Diam. (min)
BL422		2X2				10.4	7.5	24.51	2500	0.63	
BL423		2X3				12.6	8.5	24.51	2500	0.79	
BL434		3X4				16.8	10.6	36.76	3750	1.09	
BL444	12.7	4X4	12	2	5.08	18.9	11.7	49.02	5000	1.24	5.13
BL446		4X6				23.2	13.8	49.02	5000	1.55	
BL466		6X6				27.4	15.9	73.53	7500	1.58	
BL522		2X2				12.2	8.7	38.78	3950	0.95	
BL523		2X3				14.7	10	38.78	3950	1.17	
BL534		3X4				20.3	12.5	59.8	6100	1.63	
BL544	15.875	4X4	15	2.4	5.95	22.1	13.7	77.45	7900	1.85	6
BL546		4X6				27.2	16.2	77.45	7900	2.31	
BL566		6X6				32	18.6	116.18	11850	2.76	
BL622		2X2				16.4	11.8	63.73	6500	1.53	
BL623		2X3				19.7	13.4	63.73	6500	1.89	
BL634		3X4				26.3	16.8	95.59	9750	2.62	
BL644	19.05	4X4	18	3.2	7.94	29.8	18.5	127.45	13000	2.99	8.01
BL646		4X6				36.2	21.8	127.45	13000	3.71	
BL666		6X6				43.2	25.2	191.18	19500	4.45	
BL822		2X2				20.1	13.9	95.1	9700	2.6	
BL823		2X3				24.3	16	95.1	9700	3.24	
BL834		3X4				32.5	20.1	156.86	16000	4.5	
BL844	25.4	4X4	24	4	9.53	36.7	22.2	200	20400	5.14	9.6
BL846		4X6				45	26.4	200	20400	6.4	
BL866		6X6				53.2	30.5	285.29	29100	7.66	
BL1022		2X2				24	15.7	137.25	14000	3.89	
BL1023		2X3				28.9	18.1	137.25	14000	4.84	
BL1034		3X4				38.8	23.1	235.29	24000	6.73	
BL1044	31.75	4X4	30	4.8	11.11	43.8	25.6	274.51	28000	7.67	11.19
BL1046		4X6				53.6	30.5	274.51	28000	9.56	
BL1066		6X6				63.6	35.5	411.76	42000	11.5	
BL1222		2X2				27.8	19.2	176.47	18000	5.44	
BL1223		2X3				33.8	22.1	176.47	18000	6.78	
BL1234		3X4				45.3	27.9	284.31	29000	9.43	
BL1244	38.1	4X4	36	5.6	12.7	51.1	30.8	352.94	36000	10.8	12.78
BL1246		4X6				62.6	36.6	352.94	36000	13.4	
BL1266		6X6				74.3	42.5	529.41	54000	16.1	
BL1422		2X2				31.8	-	215.69	22000	7.22	
BL1423		2X3				38.4	-	215.69	22000	8.98	
BL1434		3X4				51.6	-	343.14	35000	12.5	
BL1444	44.45	4X4	42	6.4	14.29	58.2	-	431.37	44000	14.3	14.36
BL1446		4X6				71.4	-	431.37	44000	17.8	
BL1466		6X6				84.6	-	647.06	66000	21.3	
BL1622		2X2				35.8	-	323.53	33000	9.25	
BL1623		2X3				43.8	-	323.53	33000	11.5	
BL1634		3X4				58.6	-	517.65	52800	16	
BL1644	50.8	4X4	48.2	7.2	17.45	66.1	-	647.06	66000	18.3	17.55
BL1646		4X6				80.7	-	647.06	66000	22.8	
BL1666		6X6				96.4	-	970.59	99000	27.3	

AL系列板式链条
AL SERIES LEAF CHAIN

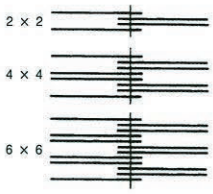

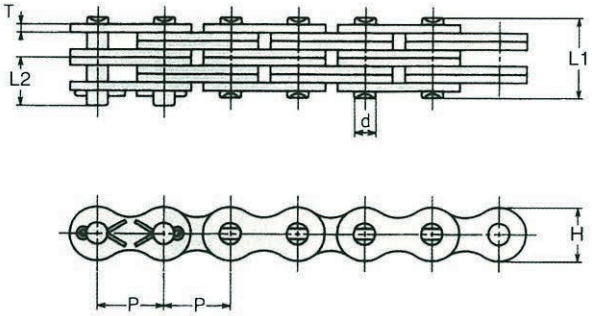

单位UNIT: mm

OCM 链号 Chain No.	节距 Pitch P	链板组合 Lacing	链板 Link Plate H	链板 Link Plate T	销轴直径 Pin Diam. d	销轴 Pin L1	销轴 Pin L2	最低抗拉强度 Minimum Strength Tensile kN	最低抗拉强度 Minimum Strength Tensile kgf	概略重量 Approx Weight kg/m	孔径(最小) Hole Diam. (min)
AL422		2X2				8.4	6.3	16.67	1700	0.38	
AL444	12.7	4X4	10.4	1.5	3.96	14.8	9.5	33.33	3400	0.74	4.01
AL466		6X6				21.2	12.7	50	5100	1.1	
AL522		2X2				10.4	7.5	27.75	2830	0.62	
AL544	15.875	4X4	13	2	5.08	18.9	11.7	55.49	5660	1.22	5.13
AL566		6X6				27.4	15.9	83.24	8490	1.81	
AL622		2X2				12.2	8.7	38.53	3930	0.87	
AL644	19.05	4X4	15.3	2.4	5.95	22.1	13.7	77.09	7860	1.71	6
AL666		6X6				32	18.6	115.59	11790	2.54	
AL822		2X2				16.4	11.8	68.14	6950	1.67	
AL844	25.4	4X4	20.8	3.2	7.94	29.8	18.5	136.27	13900	3.3	8.01
AL866		6X6				43.2	25.2	204.41	20850	4.92	
AL1022		2X2				19.5	13.9	100.98	10300	2.59	
AL1044	31.75	4X4	26	4	9.53	36.7	22.2	201.96	20600	5.14	9.6
AL1066		6X6				53.2	30.5	302.94	30900	7.68	
AL4222		2X2				24	15.7	137.25	14000	3.73	
AL4244	38.1	4X4	31.2	4.8	11.11	43.8	25.6	274.51	28000	7.38	11.18
AL1266		6X6				63.6	35.5	411.76	42000	11	
AL1444		4X4				51.1	30.8	362.75	37000	9.92	
AL1466	44.45	6X6	36.2	5.6	12.7	74	42.5	544.12	55500	14.8	12.78
AL1644		4X4				58.2	-	455.88	46500	13.1	
AL1666	50.8	6X6	41.6	6.4	14.29	84.5	-	683.82	69750	19.6	14.36

OCM 小型输送链条
OCM SMALL CONVEYOR CHAIN

环形链条
CIRCULAR CHAIN

该链条因间隙特大，可侧弯和扭转，设计用于曲线式输送条件。链条的制造材料与ANSI标准滚子链相同，并可在ANSI标准链轮上运行。

The chain is an extra clearance chain to permit side flexing and twisting. It is designed for curved conveyor application. The chain is made of the same material to ANSI standard roller chain, and operate on ANSI standard sprockets.

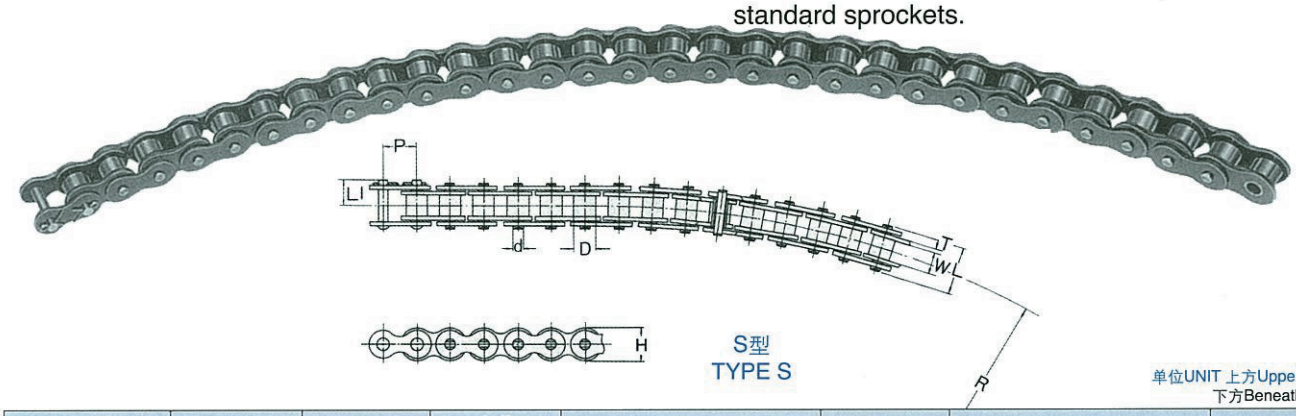

S型
TYPE S

单位UNIT 上方Upper: inch
下方Beneath: mm

OCM 链号 Chain No.	节距 Pitch P	滚子直径 Roller Diam. D	内节内宽 Width between L.P. W	链板 Link Plate H	链板 Link Plate T	销轴直径 Pin Diam. d	销轴 Pin L	销轴 Pin L1	最小侧弧半径 Min Radius of Side Bow R
40C	0.500	0.312	0.313	0.472	0.059	0.127	0.669	0.394	13.78
	12.7	7.92	7.95	12	1.5	3.22	17	10	350
50C	0.625	0.4	0.376	0.591	0.079	0.165	0.843	0.5	15.748
	15.88	10.16	9.55	15	2	4.2	21.4	12.7	400
60C	0.750	0.469	0.5	0.709	0.094	0.2	1.039	0.591	21.654
	19.05	11.91	12.7	18	2.4	5.08	26.4	15	550
80C	1.000	0.625	0.626	0.945	0.126	0.234	1.378	0.78	29.528
	25.4	15.88	15.9	24	3.2	5.95	35	19.8	750

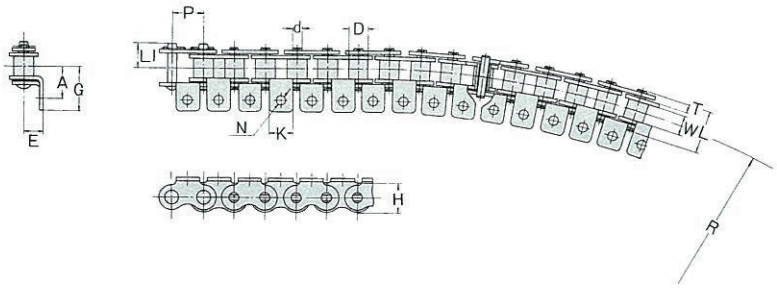

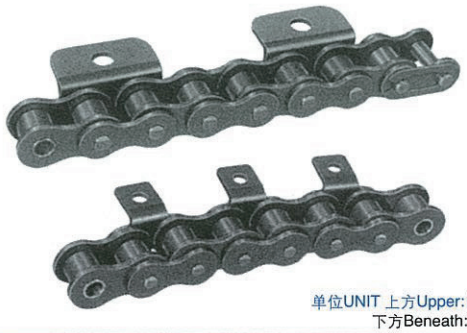

单位UNIT 上方Upper: inch
下方Beneath: mm

OCM 链号 Chain No.	K	BA-BK附板 (BA·BK)Attachment N	BA-BK附板 (BA·BK)Attachment A	BA-BK附板 (BA·BK)Attachment E	G	平均抗拉强度 Average Tensile Strength Lb/kgf	概略重量 Approx Weight Lb/ft kg/m	每块附板 附加重量(kgf) Additional Weight Per Attachment (kgf) Lb/kg BA-1	每块附板 附加重量(kgf) Additional Weight Per Attachment (kgf) Lb/kg BK-1
40C	0.374	0.142	0.5	0.315	0.691	2425	0.42	0.002	0.004
	9.5	3.6	12.7	8	17.55	1100	0.62	0.001	0.002
50C	0.5	0.205	0.626	0.406	0.909	4189	0.68	0.009	0.018
	12.7	5.2	15.9	10.3	23.1	1900	1.01	0.004	0.008
60C	0.626	0.205	0.752	0.469	1.094	6063	1.02	0.015	0.031
	15.9	5.2	19.1	11.9	27.8	2750	1.52	0.007	0.014
80C	0.752	0.268	1	0.626	1.276	7496	1.65	0.024	0.049
	19.1	6.8	25.4	15.9	32.4	3400	2.46	0.011	0.022

双节距输送链条
DOUBLE PITCH CONVEYOR CHAIN

该输送链条介乎精密滚子链与标准FM、FE型输送链之间。
This conveyor is midway between precision roller chain and FM, FE type conveyors.

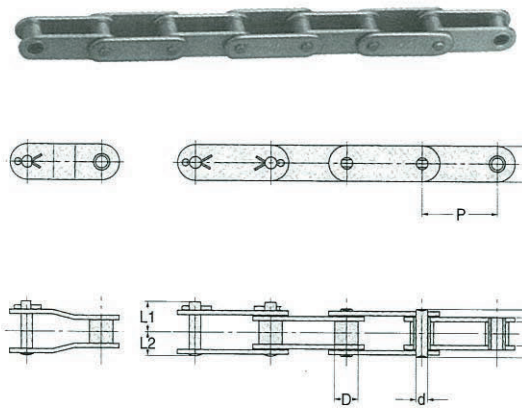

小滚子型
SMALL ROLLER

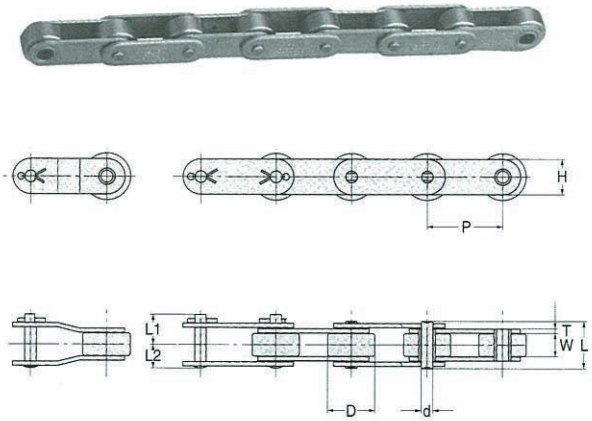

大滚子型
LARGE ROLLER

小滚子型 SMALL ROLLER

单位UNIT 上方Upper: inch
下方Beneath: mm

OCM 链号 Chain No.	ANSI 链号 ANSI No.	节距 Pitch P	滚子直径 Roller Diam. D	内节内宽 Width between L.P. W	链板 Link Plate H	链板 Link Plate T	销轴直径 Pin Diam. d	销轴 Pin L	销轴 Pin L1	销轴 Pin L2	平均抗拉强度 Average Tensile Strength Lb/kgf	最大工作载荷 Max. Working Load Lb/kgf	概略重量 Approx Weight Lb/ft kg/m
C2040	C2040	1.000	0.312	0.313	0.472	0.059	0.156	0.634	0.382	0.319	3638	595	0.34
		25.4	7.92	7.95	12	1.5	3.96	16.1	9.7	8.1	1650	270	0.51
C2050	C2050	1.250	0.4	0.376	0.591	0.079	0.2	0.799	0.476	0.409	5952	970	0.58
		31.75	10.16	9.55	15	2	5.08	20.3	12.1	10.4	2700	440	0.87
C2060H	C2060H	1.500	0.469	0.5	0.677	0.126	0.234	1.13	0.65	0.563	8598	1323	1.01
		38.1	11.91	12.7	17.2	3.2	5.95	28.7	16.5	14.3	3900	600	1.51
C2080H	C2080H	2.000	0.625	0.626	0.945	0.157	0.313	1.413	0.839	0.709	14771	2205	1.79
		50.8	15.88	15.9	24	4	7.94	35.9	21.3	18	6700	1000	2.66
C2100H	C2100H	2.500	0.75	0.754	1.142	0.189	0.375	1.697	0.992	0.85	23149	3307	2.68
		63.5	19.05	19.15	29	4.8	9.53	43.1	25.2	21.6	10500	1500	3.99
C2120H	C2120H	3.000	0.875	1.006	1.339	0.22	0.437	2.11	1.185	1.055	33951	4630	3.76
		76.2	22.23	25.55	34	5.6	11.11	53.6	30.1	26.8	15400	2100	5.6
C2160H	C2160H	4.000	1.125	1.256	1.85	0.283	0.563	2.673	1.52	1.339	49604	7937	6.38
		101.6	28.58	31.9	47	7.2	14.29	67.9	38.6	34	22500	3600	9.5

大滚子型 LARGE ROLLER

单位UNIT 上方Upper: inch
下方Beneath: mm

OCM 链号 Chain No.	ANSI 链号 ANSI No.	节距 Pitch P	滚子直径 Roller Diam. D	内节内宽 Width between L.P. W	链板 Link Plate H	链板 Link Plate T	销轴直径 Pin Diam. d	销轴 Pin L	销轴 Pin L1	销轴 Pin L2	平均抗拉强度 Average Tensile Strength Lb/kgf	最大工作载荷 Max. Working Load Lb/kgf	概略重量 Approx Weight Lb/ft kg/m
C2042	C2042	1.000	0.625	0.313	0.472	0.059	0.156	0.634	0.382	0.319	3638	595	0.58
		25.4	15.88	7.95	12	1.5	3.96	16.1	9.7	8.1	1650	270	0.87
C2052	C2052	1.250	0.75	0.376	0.591	0.079	0.2	0.799	0.476	0.409	5952	970	0.91
		31.75	19.05	9.55	15	2	5.08	20.3	12.1	10.4	2700	440	1.35
C2062H	C2062H	1.500	0.875	0.5	0.677	0.126	0.234	1.13	0.65	0.563	8598	1323	1.47
		38.1	22.23	12.7	17.2	3.2	5.95	28.7	16.5	14.3	3900	600	2.19
C2082H	C2082H	2.000	1.125	0.626	0.945	0.157	0.313	1.413	0.839	0.709	14771	2205	2.47
		50.8	28.58	15.9	24	4	7.94	35.9	21.3	18	6700	1000	3.68
C2102H	C2102H	2.500	1.563	0.754	1.142	0.189	0.375	1.697	0.992	0.85	23149	3307	4.23
		63.5	39.69	19.15	29	4.8	9.53	43.1	25.2	21.6	10500	1500	6.3
C2122H	C2122H	3.000	1.75	1.006	1.339	0.22	0.437	2.11	1.185	1.055	33951	4630	6.32
		76.2	44.45	25.55	34	5.6	11.11	53.6	30.1	26.8	15400	2100	9.4
C2162H	C2162H	4.000	2.25	1.256	1.85	0.283	0.563	2.673	1.52	1.339	49604	7937	9.74
		101.6	57.15	31.9	47	7.2	14.29	67.9	38.6	34	22500	3600	14.5

带附板滚子链
ROLLER CHAIN WITH ATTACHMENT

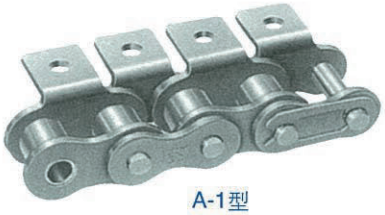

A-1型
TYPE A-1

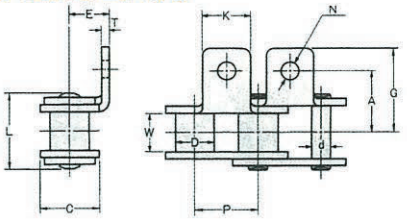

K-1型
TYPE K-1

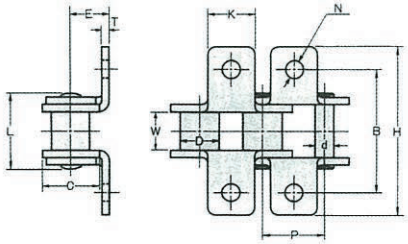

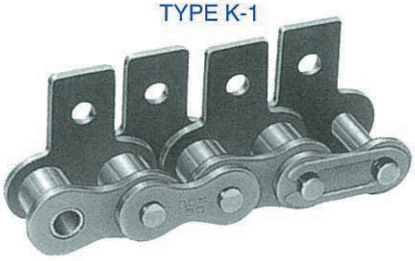

SA-1型
TYPE SA-1

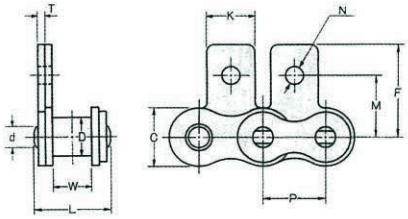

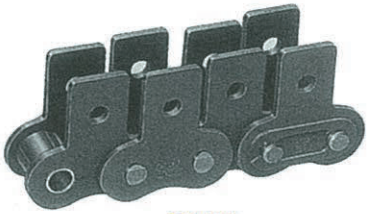

SK-1型
TYPE SK-1

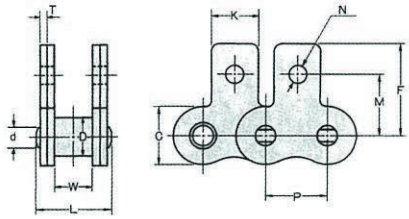

单位UNIT 上方Upper: inch
下方Beneath: mm

OCM 链号 Chain No.	节距 Pitch P	滚子直径 Roller Diam. D	内节内宽 Width between L.P. W	链板 Link Plate C	链板 Link Plate T	销轴 Pin d	销轴 Pin L	(BA、BK、SA、SK型) 附板 (BA·BK)Attachment (L)	K	N	A	E	G	(2A) B	(2G) H	M	F	每块附板附加重量 Additional Weight Per Attachment Lb/kg BA·SA	BK·SK
25	0.250 6.35	0.130 3.3	0.126 3.2	0.230 5.85	0.030 0.75	0.091 2.3	0.295 7.5	0.307 7.8	0.220 5.6	0.134 3.4	0.281 7.15	0.187 4.75	0.390 9.9	0.563 14.3	0.780 19.8	0.313 7.95	0.459 11.65	0.0007 0.0003	0.0013 0.0006
35	0.375 9.525	0.200 5.08	0.189 4.8	0.354 9	0.049 1.25	0.141 3.58	0.461 11.7	0.465 11.8	0.311 7.9	0.110 2.8	0.374 9.5	0.250 6.35	0.508 12.9	0.748 19	1.016 25.8	0.374 9.5	0.579 14.7	0.0018 0.0008	0.0035 0.0016
40	0.500 12.7	0.312 7.92	0.313 7.95	0.472 12	0.059 1.5	0.156 3.96	0.634 16.1	0.654 16.6	0.374 9.5	0.142 3.6	0.500 12.7	0.315 8	0.691 17.55	1.000 25.4	1.382 35.1	0.500 12.7	0.750 19.05	0.0022 0.001	0.0044 0.002
50	0.625 15.875	0.400 10.16	0.376 9.55	0.591 15	0.079 2	0.200 5.08	0.799 20.3	0.819 20.8	0.500 12.7	0.205 5.2	0.626 15.9	0.406 10.3	0.909 23.1	1.252 31.8	1.819 46.2	0.628 15.95	0.994 25.25	0.0088 0.004	0.0176 0.008
60	0.750 19.05	0.469 11.91	0.500 12.7	0.709 18	0.094 2.4	0.234 5.95	1.000 25.4	1.020 25.9	0.626 15.9	0.205 5.2	0.750 19.05	0.469 11.9	1.094 27.8	1.500 38.1	2.189 55.6	0.720 18.3	1.155 29.33	0.0154 0.007	0.0309 0.014
80	1.000 25.4	0.625 15.88	0.626 15.9	0.945 24	0.126 3.2	0.313 7.94	1.287 32.7	1.299 33	0.752 19.1	0.268 6.8	1.000 25.4	0.626 15.9	1.276 32.4	2.000 50.8	2.551 64.8	0.969 24.6	1.366 34.7	0.0243 0.011	0.0485 0.022
100	1.250 31.75	0.750 19.05	0.754 19.15	1.181 30	0.157 4	0.375 9.53	1.697 43.1	1.701 43.2	1.000 25.4	0.346 8.8	1.250 31.75	0.780 19.8	1.719 43.65	2.500 63.5	3.437 87.3	1.252 31.8	1.705 43.3	0.0507 0.023	0.1014 0.046
120	1.500 38.1	0.875 22.23	1.006 25.55	1.417 36	0.189 4.8	0.437 11.11	2.106 53.5	2.114 53.7	1.126 28.6	0.413 10.5	1.500 38.1	0.906 23	2.136 54.25	3.000 76.2	4.272 108.5	1.437 36.5	2.031 51.6	0.0838 0.038	0.1676 0.076
140	1.750 44.45	1.000 25.4	1.004 25.5	1.654 42	0.220 5.6	0.500 12.7	2.319 58.9	2.323 59	1.374 34.9	0.472 12	1.750 44.45	1.126 28.6	2.421 61.5	3.500 88.9	4.843 123	1.750 44.45	2.441 62	0.1455 0.066	0.291 0.132
160	2.000 50.8	1.125 28.58	1.256 31.9	1.850 47	0.252 6.4	0.563 14.29	2.720 69.1	2.728 69.3	1.500 38.1	0.551 14	2.000 50.8	1.252 31.8	2.811 71.4	4.000 101.6	5.622 142.8	2.000 50.8	2.750 69.85	0.172 0.078	0.3439 0.156

有不锈钢附板链条。
(L)指不锈钢链条尺寸。
Stainless attachment chain is available.
(L) indicates the dimension of stainless steel chain.

带附板双节距链条
DOUBLE PITCH CHAIN WITH ATTACHMENT

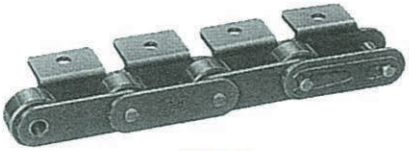

A-1.2型
TYPE A-1.2

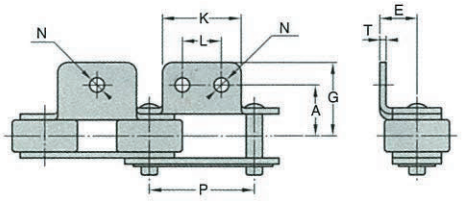

K-1.2型
TYPE K-1.2

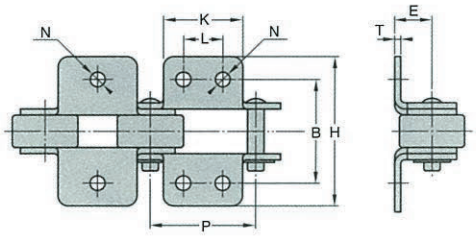

SA-1.2型
TYPE SA-1.2

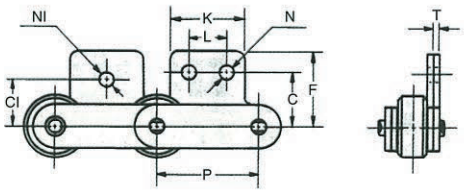

SK-1.2型
TYPE SK-1.2

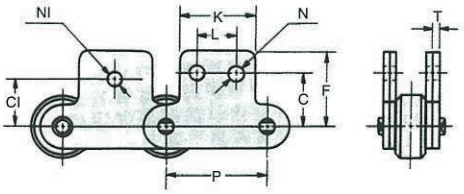

单位UNIT 上方Upper: inch
下方Beneath: mm

OCM 链号 Chain No.	节距 Pitch P	链板 Link Plate T	(BA、BK、SA、SK型) 附板 (BA·BK·SA·SK)Attachment K	N	L	A	E	G	B (2A)	H (2G)	C	F	C1	N1	每块附板附加重量 Additional Weight Per Attachment Lb/kg BA·SA	BK·SK
C2040-C2042	1.000 25.4	0.059 1.5	0.752 19.1	0.142 3.6	0.374 9.5	0.500 12.7	0.358 9.1	0.780 19.8	1.000 25.4	1.559 39.6	0.531 13.5	0.807 20.5	0.437 11.1	0.205 5.2	0.007 0.003	0.013 0.006
C2050-C2052	1.250 31.75	0.079 2	0.937 23.8	0.205 5.2	0.469 11.9	0.626 15.9	0.437 11.1	0.965 24.5	1.252 31.8	1.929 49	0.626 15.9	0.984 25	0.563 14.3	0.268 6.8	0.013 0.006	0.026 0.012
C2060H-C2062H	1.500 38.1	0.126 3.2	1.126 28.6	0.205 5.2	0.563 14.3	0.843 21.4	0.579 14.7	1.240 31.5	1.685 42.8	2.480 63	0.752 19.1	1.295 32.9	0.689 17.5	0.346 8.8	0.037 0.017	0.075 0.034
C2080H-C2082H	2.000 50.8	0.157 4	1.500 38.1	0.268 6.8	0.752 19.1	1.094 27.8	0.752 19.1	1.602 40.7	2.189 55.6	3.205 81.4	1.000 25.4	1.713 43.5	0.874 22.2	0.413 10.5	0.082 0.037	0.163 0.074
C2100H-C2102H	2.500 63.5	0.189 4.8	1.874 47.6	0.346 8.8	0.937 23.8	1.311 33.3	0.921 23.4	1.965 49.9	2.622 66.6	3.929 99.8	1.252 31.8	2.106 53.5	1.126 28.6	0.551 14	0.154 0.07	0.309 0.14
C2120H-C2122H	3.000 76.2	0.220 5.6	2.252 57.2	0.413 10.5	1.126 28.6	1.563 39.7	1.094 27.8	2.390 60.7	3.126 79.4	4.780 121.4	1.469 37.3	2.480 63	1.311 33.3	0.630 16	0.254 0.115	0.507 0.23
C2160H-C2162H	4.000 101.6	0.283 7.2	3.000 76.2	0.551 14	1.500 38.1	2.063 52.4	1.437 36.5	3.028 76.9	4.126 104.8	6.055 153.8	2.000 50.8	3.012 76.5	1.752 44.5	0.827 21	0.5 0.227	1.001 0.454

有不锈钢附板链条。
Stainless attachment chain is available.

带长销轴滚子链
ROLLER CHAIN WITH EXTEND PIN

D-3

D-1

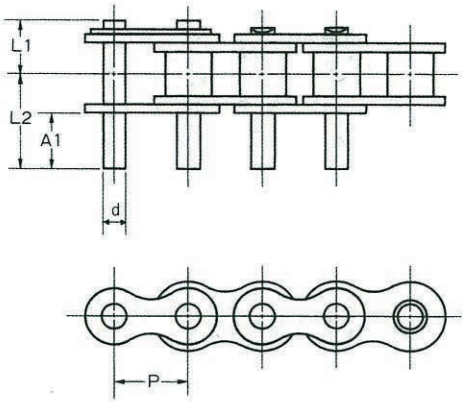

D-3长销轴
D-3 EXTEND PIN

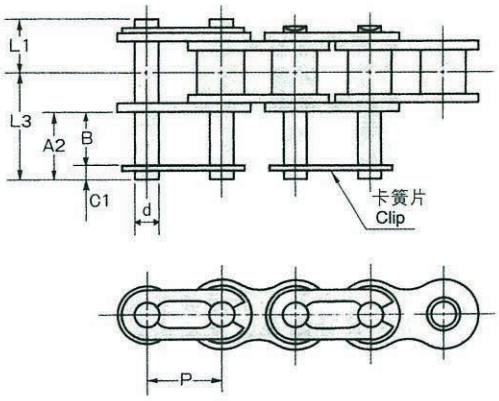

带卡簧片的长销轴
EXTEND PIN WITH SPRING CLIP

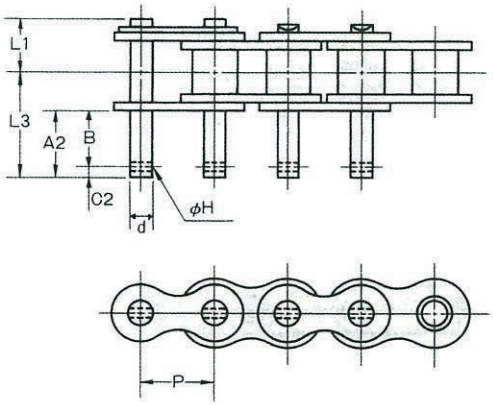

带开口销孔的长销轴
EXTEND PIN WITH COTTER HOLE

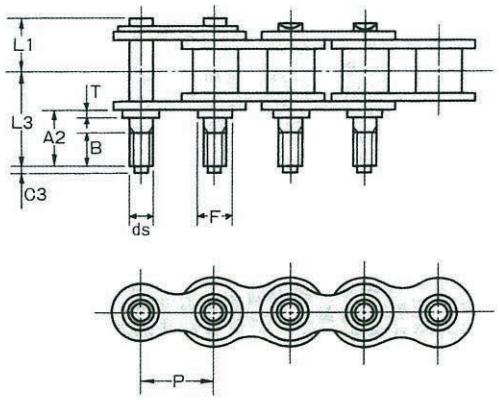

带螺纹的长销轴
THREADED EXTEND PIN

单位UNIT 上方Upper: inch
下方Beneath: mm

OCM 链号 Chain No.	节距 Pitch P	销轴直径 Pin Diam. d	ds	F	链板 Link Plate T	ø H	销轴 Pin L1	L2	A1	C1	C2	C3	L3,A2,B
35	0.375 9.525	0.141 3.58	M3	0.180 4.58	0.047 1.2	0.047 1.2	0.264 6.7	0.575 14.6	0.374 9.5	0.067 1.7	0.055 1.4	0.039 1.0	确定A2和B或确定L3和B Specify either A2 and B or L3 and B
40	0.500 12.7	0.156 3.96	M4	0.201 5.11	0.059 1.5	0.063 1.6	0.382 9.7	0.657 16.7	0.374 9.5	0.091 2.3	0.083 2.1	0.039 1.0	
50	0.625 15.875	0.200 5.08	M5	0.238 6.04	0.079 2	0.063 1.6	0.476 12.1	0.827 21	0.469 11.9	0.122 3.1	0.091 2.3	0.039 1.0	
60	0.750 19.05	0.234 5.95	M6	0.319 8.09	0.094 2.4	0.079 2	0.579 14.7	1.014 25.75	0.563 14.3	0.122 3.1	0.102 2.6	0.059 1.5	
80	1.000 25.4	0.313 7.94	M8	0.381 9.68	0.126 3.2	0.102 2.6	0.776 19.7	1.331 33.8	0.752 19.1	0.154 3.9	0.142 3.6	0.059 1.5	
100	1.250 31.75	0.375 9.53	M10	0.443 11.26	0.157 4	0.122 3.1	0.925 23.5	1.642 41.7	0.937 23.8	- -	0.157 4.0	0.079 2.0	
120	1.500 38.1	0.437 11.11	M12	0.520 13.2	0.189 4.8	0.122 3.1	1.118 28.4	2.020 51.3	1.126 28.6	- -	0.157 4.0	0.079 2.0	

100及100以上的没有卡簧片。
Spring clip is not available for 100 and above.

带长销轴双节距链条
DOUBLE PITCH CHAIN WITH EXTEND PIN

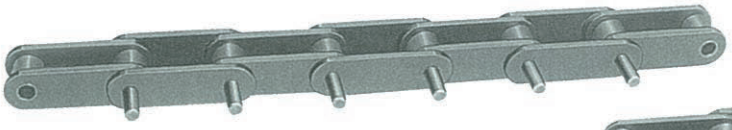

D-3

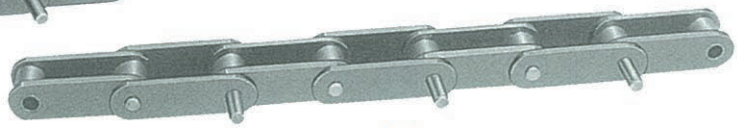

D-1

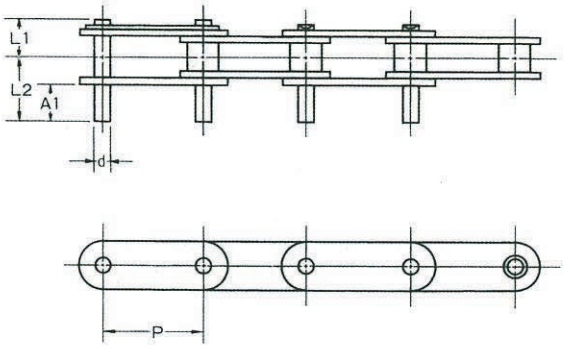

D-3长销轴
D-3 EXTEND PIN

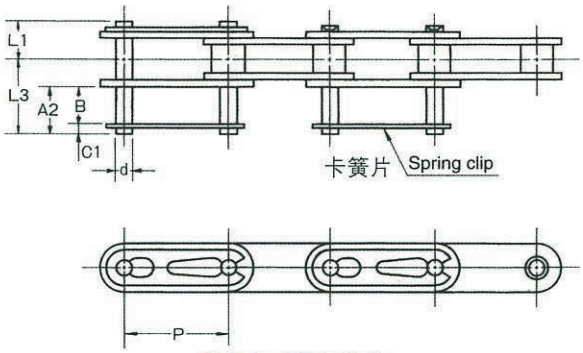

带卡簧片的长销轴
EXTEND PIN WITH SPRING CLIP

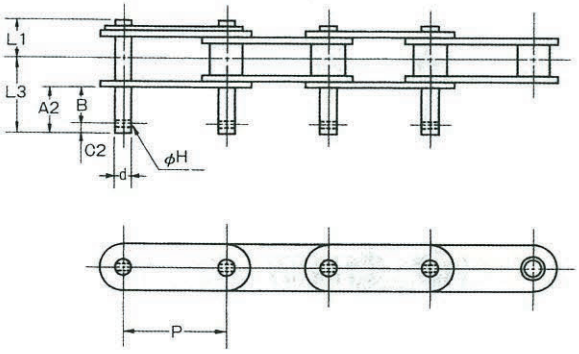

带开口销孔的长销轴
EXTEND PIN WITH COTTER HOLE

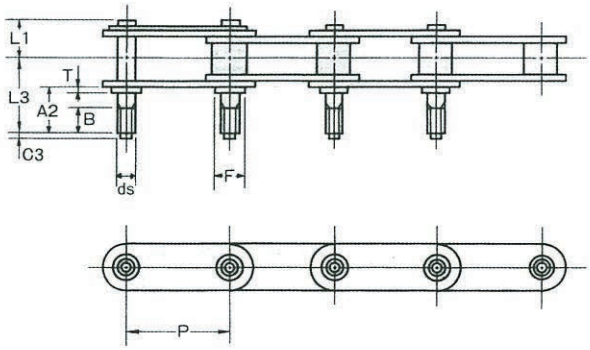

带螺纹的长销轴
THREADED EXTEND PIN

单位UNIT 上方Upper: inch
下方Beneath: mm

OCM 链号 Chain No.	节距 Pitch P	销轴直径 Pin Diam. d	ds	F	链板 Link Plate T	ø H	销轴 Pin L1	L2	A1	C1	C2	C3	L3,A2,B
C2040-C2042	1.000 25.4	0.156 3.96	M4	0.201 5.11	0.059 1.5	0.063 1.6	0.382 9.7	0.661 16.8	0.374 9.5	0.091 2.3	0.083 2.1	0.039 1.0	确定A2和B或确定L3和B Specify either A2 and B or L3 and B
C2050-C2052	1.250 31.75	0.200 5.08	M5	0.238 6.04	0.079 2	0.063 1.6	0.476 12.1	0.831 21.1	0.469 11.9	0.122 3.1	0.091 2.3	0.039 1.0	
C2060H-C2062H	1.500 38.1	0.234 5.95	M6	0.319 8.09	0.126 3.2	0.079 2	0.650 16.5	1.083 27.5	0.563 14.3	0.122 3.1	0.102 2.6	0.059 1.5	
C2080H-C2082H	2.000 50.8	0.313 7.94	M8	0.381 9.68	0.157 4	0.102 2.6	0.839 21.3	1.398 35.5	0.752 19.1	- -	0.142 3.6	0.059 1.5	
C2100H-C2102H	2.500 63.5	0.375 9.53	M10	0.443 11.26	0.189 4.8	0.122 3.1	0.992 25.2	1.709 43.4	0.937 23.8	- -	0.157 4.0	0.079 2.0	

C2080H及C2080H以上的没有卡簧片。
Spring clip is not available for C2080H and above.

大型附板
WIDE CONTOUR ATTACHMENT

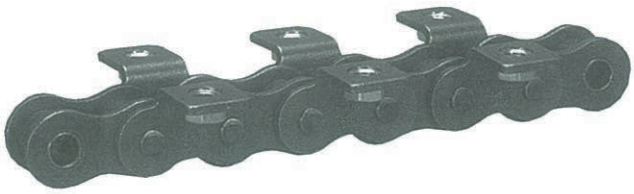

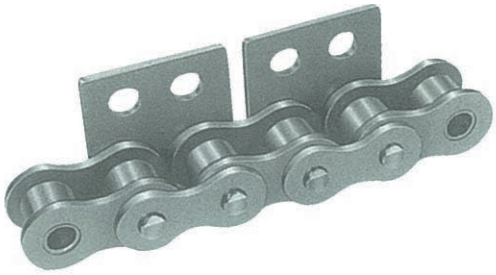

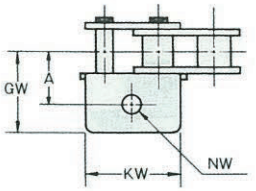

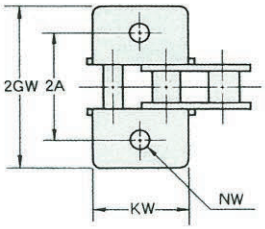

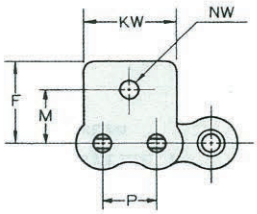

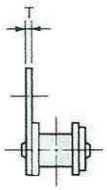

WSA-1型
TYPE WSA-1

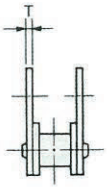

WSK-1型
TYPE WSK-1

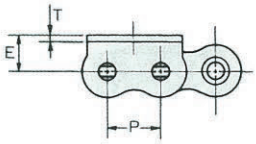

WA-1型
TYPE WA-1

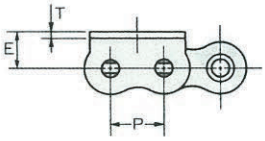

WK-1型
TYPE WK-1

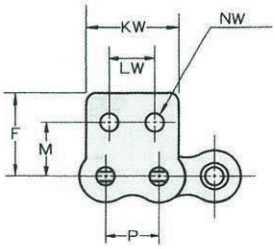

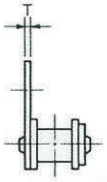

WSA-2型
TYPE WSA-2

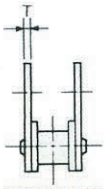

WSK-2型
TYPE WSK-2

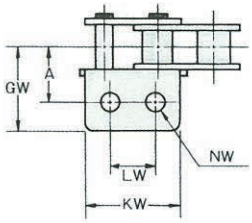

WA-2型
TYPE WA-2

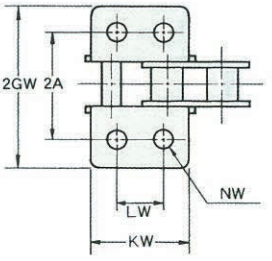

WK-2型
TYPE WK-2

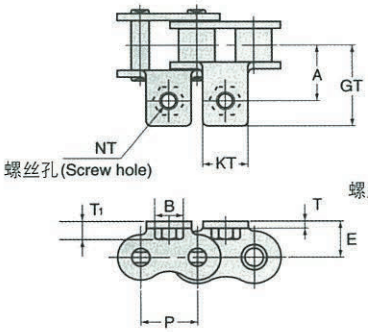

PA-1型
TYPE PA-1

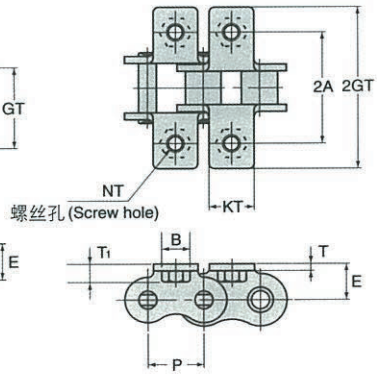

PK-1型
TYPE PK-1

单位UNIT 上方Upper: inch
下方Beneath: mm

OCM 链号 Chain No.	节距 Pitch P	KW	KT	LW	NW	NT	A	E	GW	GT	B	T1	M	F	链板 Link Plate T	每块附板附加重量 Additional Weight Per Attachment Lb/k TA	TK	WA,WSA	WK,WSK
40	0.500	0.906	0.374	0.374	0.177		0.500	0.315	0.691	0.691	0.319	0.150	0.500	0.689	0.059	0.002	0.004	0.009	0.018
	12.7	23	9.5	9.5	4.5	M4	12.7	8	17.55	17.55	8.1	3.8	12.7	17.5	1.5	0.001	0.002	0.004	0.008
50	0.625	1.134	0.500	0.469	0.217		0.626	0.406	0.909	0.909	0.362	0.201	0.626	0.909	0.079	0.009	0.018	0.015	0.031
	15.875	28.8	12.7	11.9	5.5	M5	15.9	10.3	23.1	23.1	9.2	5.1	15.9	23.1	2	0.004	0.008	0.007	0.014
60	0.750	1.362	0.626	0.563	0.260		0.750	0.469	1.094	1.094	0.453	0.287	0.720	1.057	0.094	0.015	0.031	0.029	0.057
	19.05	34.6	15.9	14.3	6.6	M6	19.05	11.9	27.8	27.8	11.5	7.3	18.3	26.85	2.4	0.007	0.014	0.013	0.026
80	1.000	1.815	0.752	0.752	0.354		1.000	0.626	1.402	1.276	0.591	0.339	0.969	1.366	0.126	0.024	0.049	0.062	0.123
	25.4	46.1	19.1	19.1	9	M8	25.4	15.9	35.6	32.4	15	8.6	24.6	34.7	3.2	0.011	0.022	0.028	0.056

带螺丝孔附板
THREADED HOLE ATTACHMENT

嵌入式附板适于附板滑动磨损快的运行条件。
Sunk attachment is suitable where attachment wears quickly from sliding.

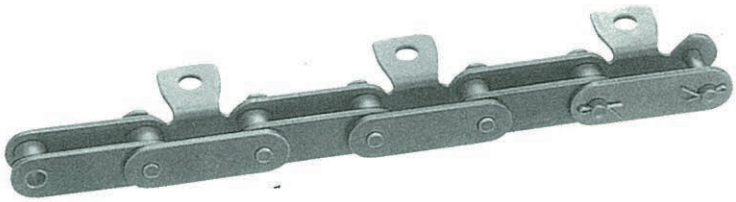

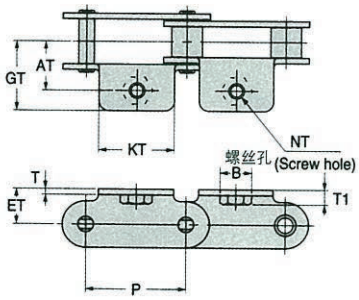

PA-1型
TYPE PA-1

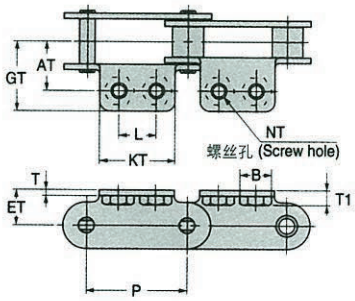

PA-2型
TYPE PA-2

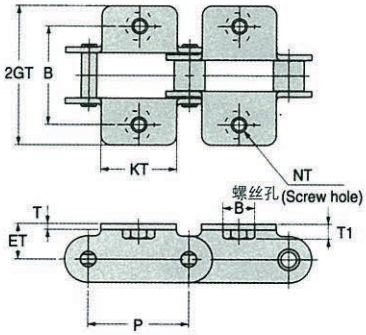

PK-1型
TYPE PK-1

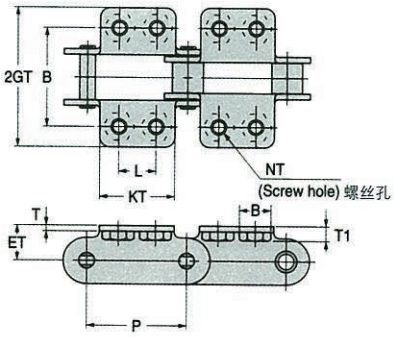

PK-2型
TYPE PK-2

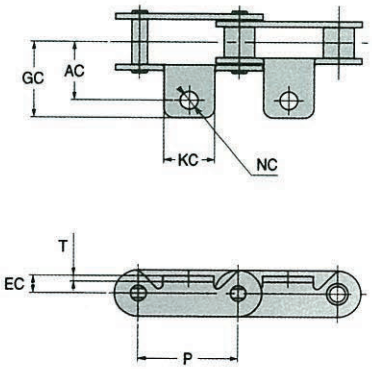

CA-1型
TYPE CA-1

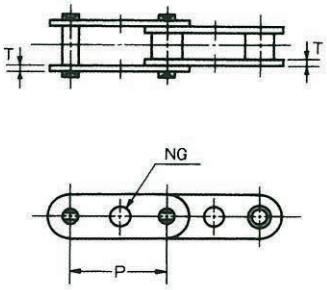

GK-1型
TYPE GK-1

单位UNIT：上方Upper：inch
下方Beneath：mm

OCM 链号 Chain No.	节距 Pitch P	KT	KC	NT	NC	NG	销轴 Pin L	AT	AC	ET	EC	GT	GC	B	T1	链板 Link Plate T	每块附板附加重量 Additional Weight Per Attachment Lb/kgf TA	TK	CA
C2040-C2042	1.000	0.752	0.512		0.177	0.161	0.374	0.500	0.591	0.358	0.177	0.780	0.768	0.319	0.150	0.059	0.007	0.013	0.002
	25.4	19.1	13	M4	4.5	4.1	9.5	12.7	15	9.1	4.5	19.8	19.5	8.1	3.8	1.5	0.003	0.006	0.001
C2050-C2052	1.250	0.937	0.630		0.217	0.205	0.469	0.626	0.709	0.437	0.197	0.965	0.945	0.362	0.201	0.079	0.013	0.026	0.004
	31.75	23.8	16	M5	5.5	5.2	11.9	15.9	18	11.1	5	24.5	24	9.2	5.1	2	0.006	0.012	0.002
C2060H-C2062H	1.500	1.126	0.748		0.205	0.244	0.563	0.843	0.906	0.579	0.244	1.240	1.398	0.453	0.287	0.126	0.037	0.075	0.013
	38.1	28.6	19	M6	5.2	6.2	14.3	21.4	23	14.7	6.2	31.5	35.5	11.5	7.3	3.2	0.017	0.034	0.006
C2080H-C2082H	2.000	1.500	-		-	0.323	0.752	1.094	-	0.752	-	1.602	-	0.591	0.339	0.157	0.082	0.163	-
	50.8	38.1	-	M8	-	8.2	19.1	27.8	-	19.1	-	40.7	-	15	8.6	4	0.037	0.074	-

C2080H和C2082H链条没有CA-1型链板。
CA-1 is not available for C2080H and C2082H.

直边链板链条
STRAIGHT LINK PLATE CHAIN

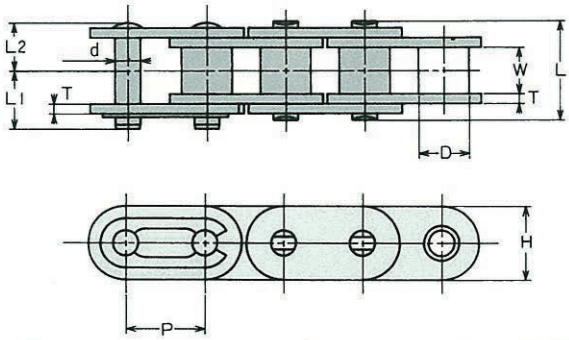

单位UNIT：上方Upper：inch
下方Beneath：mm

OCM 链号 Chain No.	节距 Pitch P	滚子直径 Roller Diam. D	内节内宽 Width between L.P. W	链板 Link Plate H	链板 Link Plate T	销轴直径 Pin Diam. d	销轴 Pin L	销轴 Pin L1	销轴 Pin L2	平均抗拉强度 Average Tensile Strength Lb/kgf	容许载荷 Allowable Load Lb/kgf	概略重量 Approx Weight Lb/ft kg/m
40E	0.500	0.312	0.313	0.472	0.059	0.156	0.634	0.382	0.317	4299	904	0.47
	12.7	7.92	7.95	12	1.5	3.96	16.1	9.7	8.05	1950	410	0.7
50E	0.625	0.4	0.376	0.591	0.079	0.2	0.799	0.476	0.4	7165	1455	0.76
	15.875	10.16	9.55	15	2	5.08	20.3	12.1	10.15	3250	660	1.13
60E	0.750	0.469	0.5	0.709	0.094	0.234	1	0.579	0.5	9921	2205	1.09
	19.05	11.91	12.7	18	2.4	5.95	25.4	14.7	12.7	4500	1000	1.62
80E	1.000	0.625	0.626	0.945	0.126	0.313	1.287	0.76	0.644	17637	3638	2.02
	25.4	15.88	15.9	24	3.2	7.94	32.7	19.3	16.35	8000	1650	3
100E	1.250	0.75	0.754	1.181	0.157	0.375	1.571	0.925	0.787	26455	5512	3.16
	31.75	19.05	19.15	30	4	9.53	39.9	23.5	20	12000	2500	4.7
120E	1.500	0.875	1.006	1.425	0.189	0.437	1.972	1.118	0.988	37038	7275	4.66
	38.1	22.23	25.55	36.2	4.8	11.11	50.1	28.4	25.1	16800	3300	6.93

没有过渡链节。
有双链板型、镀镍及不锈钢链板。

Offset link is not available.
Duplex, nickel plated and stainless steel are available.

高链板链条
DEEP LINK PLATE CHAIN

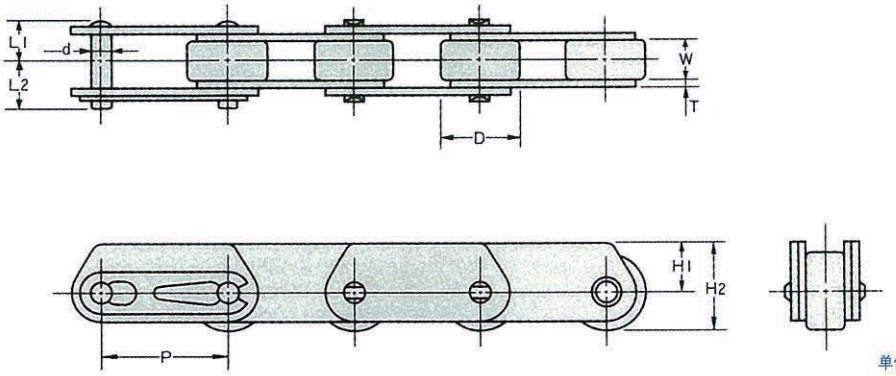

单位UNIT：上方Upper：inch
下方Beneath：mm

OCM 链号 Chain No.	节距 Pitch P	滚子直径 Roller Diam. D	内节内宽 Width between L.P. W	链板 Link Plate H1	链板 Link Plate H2	链板 Link Plate T	销轴直径 Pin Diam. d	销轴 Pin L1	销轴 Pin L2	平均抗拉强度 Average Tensile Strength Lb/kgf	容许载荷 Allowable Load Lb/kgf
C2042	1.000	0.625	0.313	0.394	0.705	0.059	0.156	0.315	0.382	3638	595
	25.4	15.88	7.95	10	17.9	1.5	3.96	8	9.7	1650	270
C2052	1.250	0.75	0.376	0.472	0.846	0.079	0.2	0.409	0.476	5952	970
	31.75	19.05	9.55	12	21.5	2	5.08	10.4	12.1	2700	440
C2062H	1.500	0.875	0.5	0.551	0.988	0.126	0.234	0.571	0.661	8598	1323
	38.1	22.23	12.7	14	25.1	3.2	5.95	14.5	16.8	3900	600
C2082H	2.000	1.125	0.626	0.709	1.268	0.157	0.313	0.709	0.839	14771	2205
	50.8	28.58	15.9	18	32.2	4	7.94	18	21.3	6700	1000

顶轮滚子链
TOP ROLLER CHAIN

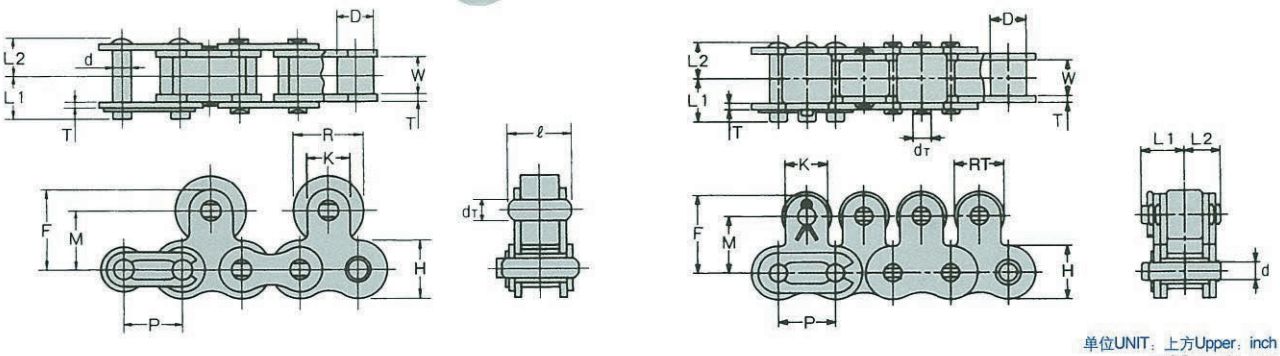

单位UNIT：上方Upper：inch
下方Beneath：mm

OCM 链号 Chain No.	节距 Pitch P	滚子直径 Roller Diam. D	内节内宽 Width between L.P. W	链板 Link Plate H	链板 Link Plate T	销轴直径 Pin Diam. d	销轴 Pin L1	销轴 Pin L2	附板 Attachment R	附板 Attachment RT	附板 Attachment ℓ	附板 Attachment F	附板 Attachment K	附板 Attachment M	附板 Attachment dT	平均抗拉强度 Average Tensile Strength Lb/kgf	容许载荷 Allowable Load Lb/kgf	概略重量 Approx Weight 每两链节 every 2nd link Lb/ft	概略重量 Approx Weight 每一链节 every link kf/m
40	0.500	0.312	0.313	0.472	0.059	0.156	0.382	0.319	0.625	0.433	0.504	0.687	0.374	0.5	0.156	3638	617	0.81	1.08
	12.7	7.92	7.95	12	1.5	3.96	9.7	8.1	15.88	11	12.8	17.45	9.5	12.7	3.96	1650	280	1.2	1.6
50	0.625	0.4	0.376	0.591	0.079	0.2	0.476	0.409	0.75	0.591	0.626	0.876	0.5	0.626	0.2	5952	1014	1.21	1.34
	15.875	10.16	9.55	15	2	5.08	12.1	10.4	19.05	15	15.9	22.25	12.7	15.9	5.08	2700	460	1.8	2
60	0.750	0.469	0.5	0.709	0.094	0.234	0.579	0.5	0.875	0.709	0.799	1.033	0.626	0.72	0.233	8333	1411	1.88	2.15
	19.05	11.91	12.7	18	2.4	5.95	14.7	12.7	22.23	18	20.3	26.25	15.9	18.3	5.93	3780	640	2.8	3.2
80	1.000	0.625	0.626	0.945	0.126	0.313	0.74	0.642	1.125	0.945	1.043	1.344	0.752	0.969	0.313	14110	2359	3.09	3.56
	25.4	15.88	15.9	24	3.2	7.94	18.8	16.3	28.58	24	26.5	34.15	19.1	24.6	7.94	6400	1070	4.6	5.3
100	1.250	0.75	0.754	1.181	0.157	0.375	0.925	0.787	1.563	0.787	1.24	1.752	1	1.252	0.375	20613	3461	5.17	5.44
	31.75	19.05	19.15	30	4	9.53	23.5	20	39.69	20	31.5	44.5	25.4	31.8	9.53	9350	1570	7.7	8.1

顶滚轮为热处理件。有聚缩醛顶滚轮。根据订货要求供货。
Top roller is heat treated.Top roller of poly acetal is available.Supplied on a made to order basis.

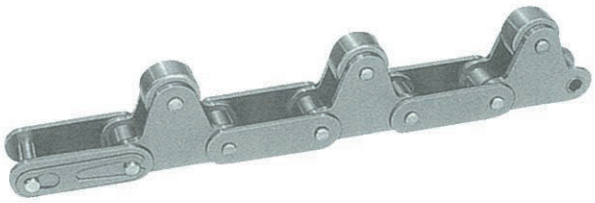

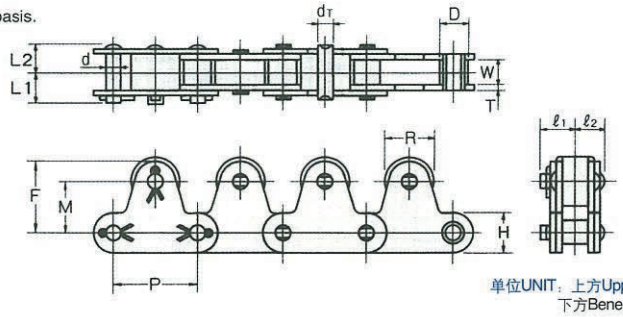

单位UNIT：上方Upper：inch
下方Beneath：mm

OCM 链号 Chain No.	节距 Pitch P	滚子直径 Roller Diam. D 小滚子 Small Roller	滚子直径 Roller Diam. D 大滚子 Large Roller	内节内宽 Width between L.P. W	链板 Link Plate H	链板 Link Plate T	销轴 Pin d	销轴 Pin L1	销轴 Pin L2	附板 Attachment R	附板 Attachment F	附板 Attachment M	附板 Attachment dT	附板 Attachment ℓ1	附板 Attachment ℓ2	平均抗拉强度 Average Tensile Strength Lb/kgf	容许载荷 Allowable Load Lb/kgf	概略重量 Approx Weight Lb/ft 小滚子 Small Roller	概略重量 Approx Weight Lb/ft 大滚子 Large Roller	概略重量 Approx Weight kg/m 小滚子 Small Roller	概略重量 Approx Weight kg/m 大滚子 Large Roller
C2040-C2042	1.000	0.312	0.625	0.313	0.472	0.059	0.156	0.382	0.319	0.625	0.827	0.591	0.200	0.411	0.329	3638	617	0.89	1.14		
	25.4	7.92	15.88	7.95	12	1.5	3.95	9.7	8.1	15.88	21	15	5.08	10.45	8.35	1650	280	1.33	1.69		
C2050-C2052	1.250	0.400	0.750	0.376	0.591	0.079	0.200	0.476	0.409	0.750	1.043	0.748	0.233	0.508	0.409	5952	1014	1.37	1.68		
	31.75	10.16	19.05	9.55	15	2	5.08	12.1	10.4	19.05	26.5	19	5.93	12.9	10.4	2700	460	2.04	2.5		
C2060H-C2062H	1.500	0.469	0.875	0.500	0.677	0.126	0.234	0.650	0.563	0.875	1.244	0.906	0.319	0.713	0.583	8598	1411	2.47	2.93		
	38.1	11.91	22.23	12.7	17.2	3.2	5.95	16.5	14.3	22.23	31.6	23	8.09	18.1	14.8	3900	640	3.68	4.36		
C2080H-C2082H	2.000	0.625	1.125	0.626	0.945	0.157	0.313	0.839	0.709	1.125	1.594	1.142	0.375	0.866	0.720	14771	2359	3.8	4.54		
	50.8	15.88	28.58	15.9	24	4	7.94	21.3	18	28.58	40.5	29	9.53	22	18.3	6700	1070	5.65	6.76		
C2100H-C2102H	2.500	0.750	1.563	0.754	1.142	0.189	0.375	0.992	0.850	1.563	1.957	1.394	0.437	0.992	0.862	23149	3461	6.12	7.64		
	63.5	19.05	39.69	19.15	29	4.8	9.53	25.2	21.6	39.69	49.7	35.4	11.11	25.2	21.9	10500	1570	9.11	11.37		

重量指每一链节顶滚轮重量。大型滚子链需要特殊链轮。根据订货要求供货。
Weight is for top roller every link. Special sprockets are required for large roller chain. Supplied on a made to order basis.

侧轮滚子链
ROLLER CHAIN WITH OUTBOARD ROLLER

该链条为带侧轮的标准滚子链，侧轮材质为聚缩醛。运行时无噪音、平稳。订货时要确定侧轮间距。
Standard roller chain with outboard roller. Outboard roller is made of poly acetal.
Quiet and smooth operation. Specify spacing of outboard roller when ordering.

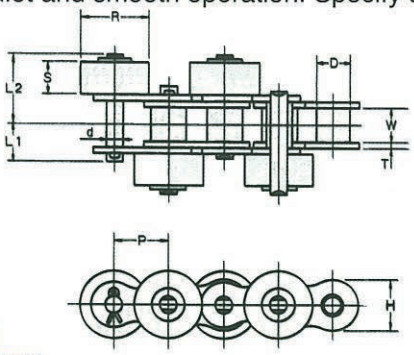

CH型
TYPE CH

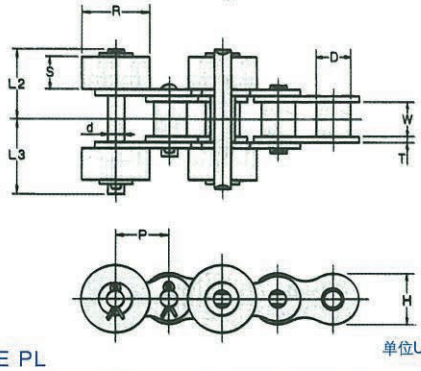

PL型
TYPE PL

单位UNIT：上方Upper：inch
下方Beneath：mm

OCM 链号 Chain No.	节距 Pitch P	滚子直径 Roller Diam. D	内节内宽 Width between L.P. W	链板 Link Plate H	链板 Link Plate T	销轴直径 Pin Diam. d	销轴 Pin L1	销轴 Pin L2	销轴 Pin L3	R	S	平均抗拉强度 Average Tensile Strength Lb/kgf	容许载荷 Allowable Load Lb/kgf	侧轮容许载荷 Allowable Load of Outboard Roller Lb/kgf	概略重量 Approx Weight Lb/ft kg/m
40	0.500	0.312	0.313	0.472	0.059	0.156	0.402	0.661	0.744	0.625	0.303	4299	617	11	0.63
	12.7	7.92	7.95	12	1.5	3.96	10.2	16.8	18.9	15.88	7.7	1950	280	5	0.94
50	0.625	0.4	0.376	0.591	0.079	0.2	0.476	0.827	0.898	0.75	0.366	7055	1014	15	0.95
	15.88	10.16	9.55	15	2	5.08	12.1	21	22.8	19.05	9.3	3200	460	7	1.42
60	0.750	0.469	0.5	0.709	0.094	0.234	0.598	1.067	1.157	0.875	0.488	9811	1411	22	1.42
	19.05	11.91	12.7	18	2.4	5.95	15.2	27.1	29.4	22.23	12.4	4450	640	10	2.11
80	1.000	0.625	0.626	0.949	0.126	0.313	0.776	1.331	1.465	1.125	0.614	16535	2359	40	2.4
	25.4	15.88	15.9	24.1	3.2	7.94	19.7	33.8	37.2	28.58	15.6	7500	1070	18	3.57
100	1.250	0.75	0.754	1.185	0.157	0.375	0.925	1.63	1.768	1.563	0.748	24251	3461	66	3.74
	31.75	19.05	19.15	30.1	4	9.53	23.5	41.4	44.9	39.69	19	11000	1570	30	5.56

重量指CH型每一链节侧轮的重量和PL型每两链节侧轮的重量。有白色和黑色。Weight is for outboard roller every link for CH type and every 2nd for PL type. White and black are available.

长节距聚缩醛侧轮滚子链
Extend pitch roller chain with outboard roller of poly acetal.

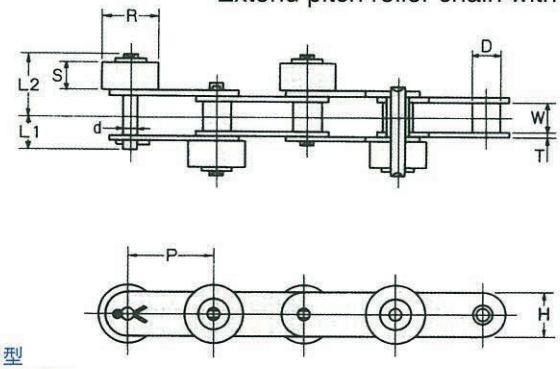

CH型
TYPE CH

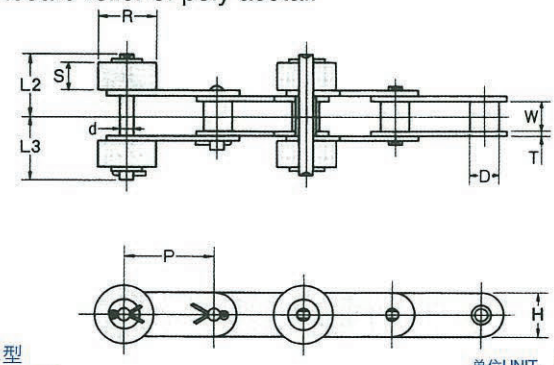

PL型
TYPE PL

单位UNIT：上方Upper：inch
下方Beneath：mm

OCM 链号 Chain No.	节距 Pitch P	滚子直径 Roller Diam. D	内节内宽 Width between L.P. W	链板 Link Plate H	链板 Link Plate T	销轴直径 Pin Diam. d	销轴 Pin L1	销轴 Pin L2	销轴 Pin L3	R	S	平均抗拉强度 Average Tensile Strength Lb/kgf	容许载荷 Allowable Load Lb/kgf	侧轮容许载荷 Allowable Load of Outboard Roller Lb/kgf	概略重量 Approx Weight Lb/ft kg/m
C2040	1.000	0.312	0.313	0.472	0.059	0.156	0.402	0.661	0.744	0.625	0.303	4299	617	11	0.44
	25.4	7.92	7.95	12	1.5	3.96	10.2	16.8	18.9	15.88	7.7	1950	280	5	0.66
C2050	1.250	0.4	0.376	0.591	0.079	0.2	0.476	0.827	0.898	0.75	0.366	7055	1014	15	0.69
	31.75	10.16	9.55	15	2	5.08	12.1	21	22.8	19.05	9.3	3200	460	7	1.03
C2060H	1.500	0.469	0.5	0.677	0.126	0.234	0.669	1.134	1.228	0.875	0.488	9811	1411	22	1.21
	38.1	11.91	12.7	17.2	3.2	5.95	17	28.8	31.2	22.23	12.4	4450	640	10	1.8
C2080H	2.000	0.625	0.626	0.945	0.157	0.313	0.839	1.398	1.531	1.125	0.614	16535	2359	40	2.1
	50.8	15.88	15.9	24	4	7.94	21.3	35.5	38.9	28.58	15.6	7500	1070	18	3.12
C2100H	2.500	0.75	0.754	1.142	0.189	0.375	0.992	1.697	1.835	1.563	0.748	24251	3461	66	3.21
	63.5	19.05	19.15	29	4.8	9.53	25.2	43.1	46.6	39.69	19	11000	1570	30	4.77

重量指CH型每一链节侧轮的重量和PL型每两链节侧轮的重量。
Weight for outboard roller every link for CH type and every 2nd for PL type.

带横轴的宽幅链条
WIDE CHAIN WITH CROSSRODS

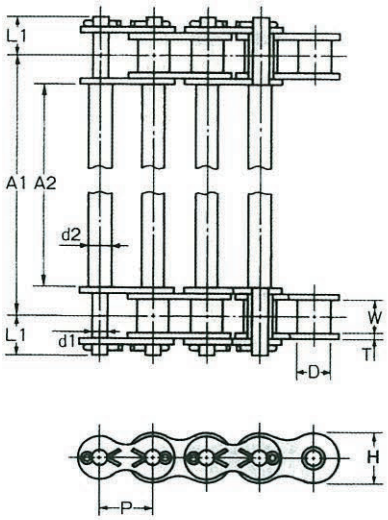

单位UNIT：上方Upper：inch
下方Beneath：mm

OCM 链号 Chain No.	节距 Pitch P	滚子直径 Roller Diam. D	内节内宽 Width between L.P. W	链板 Link Plate H	链板 Link Plate T	销轴 Pin d1	销轴 Pin L1	d2	横轴 Bar A1,A2
40	0.500 12.7	0.313 7.94	0.313 7.95	0.472 12	0.059 1.5	0.156 3.96	0.402 10.2	0.244 6.2	确定A1 或A2 Specity either A1 or A2
50	0.625 15.875	0.4 10.16	0.376 9.55	0.591 15	0.079 2	0.2 5.08	0.476 12.1	0.276 7	
60	0.750 19.05	0.469 11.91	0.5 12.7	0.709 18	0.094 2.4	0.234 5.95	0.598 15.2	0.319 8.09	
80	1.000 25.4	0.625 15.88	0.626 15.9	0.945 24	0.126 3.2	0.313 7.94	0.776 19.7	0.381 9.68	

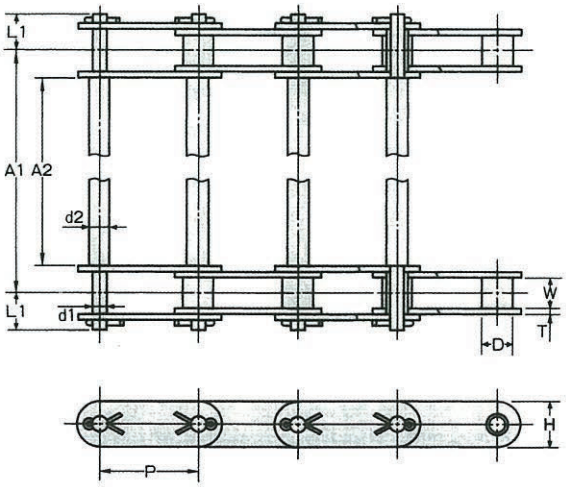

单位UNIT：上方Upper：inch
下方Beneath：mm

OCM 链号 Chain No.	节距 Pitch P	滚子直径 Roller Diam. D 小滚子 Small Roller	滚子直径 Roller Diam. D 大滚子 Large Roller	内节内宽 Width between L.P. W	链板 Link Plate H	链板 Link Plate T	销轴 Pin d1	销轴 Pin L1	横轴 Bar d2	横轴 Bar A1,A2
C2040-C2042	1.000 25.4	0.313 7.94	0.625 15.88	0.313 7.95	0.472 12	0.059 1.5	0.156 3.96	0.402 10.2	0.244 6.2	确定A1 或A2 Specity either A1 or A2
C2050-C2052	1.250 31.75	0.4 10.16	0.75 19.05	0.376 9.55	0.591 15	0.079 2	0.2 5.08	0.476 12.1	0.276 7	
C2060H-2062H	1.500 38.1	0.469 11.91	0.875 22.23	0.5 12.7	0.677 17.2	0.126 3.2	0.234 5.95	0.661 16.8	0.319 8.09	
C2080H-C2082H	2.000 50.8	0.625 15.88	1.125 28.58	0.626 15.9	0.945 24	0.157 4	0.313 7.94	0.839 21.3	0.381 9.68	

空心销轴链条
HOLLOW PIN CHAIN

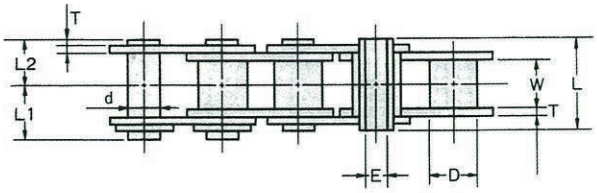

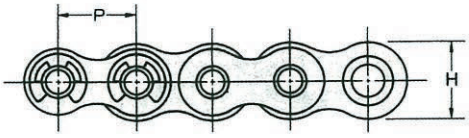

单位UNIT：上方Upper：inch
下方Beneath：mm

OCM 链号 Chain No.	节距 Pitch P	滚子直径 Roller Diam. D	内节内宽 Width between L.P. W	销轴直径 Pin Diam. d	距排 Trans Pitch E(MIN)	销轴 Pin L	L1	L2	链板 Link Plate H	T	平均抗拉强度 Average Tensile Strength Lb/kgf	容许载荷 Allowable Load Lb/kgf	概略重量 Approx Weight Lb/ft kg/m
40HP	0.500	0.312	0.313	0.222	0.157	0.63	0.362	0.315	0.472	0.059	2425	397	0.34
	12.7	7.92	7.95	5.65	4	16	9.2	8	12	1.5	1100	180	0.51
50HP	0.625	0.4	0.376	0.284	0.202	0.799	0.451	0.4	0.591	0.079	4409	705	0.56
	15.875	10.16	9.55	7.21	5.12	20.3	11.45	10.15	15	2	2000	320	0.84
60HP	0.750	0.469	0.5	0.327	0.236	1	0.559	0.5	0.709	0.094	6063	948	0.83
	19.05	11.91	12.7	8.3	6	25.4	14.2	12.7	18	2.4	2750	430	1.23
80HP	1.000	0.625	0.626	0.433	0.315	1.287	0.703	0.644	0.949	0.126	10803	1720	1.48
	25.4	15.88	15.9	11	8	32.7	17.85	16.35	24.1	3.2	4900	780	2.2

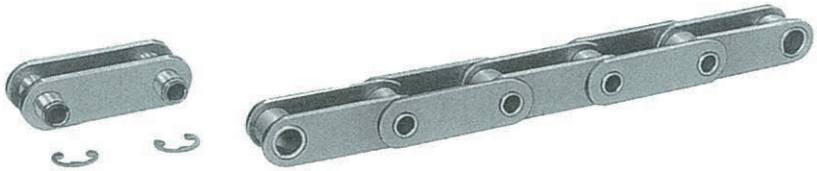

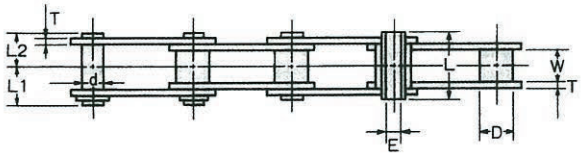

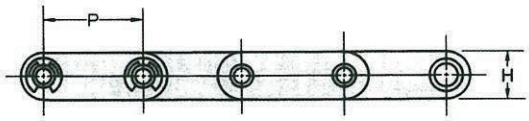

套筒型
TYPE BUSH

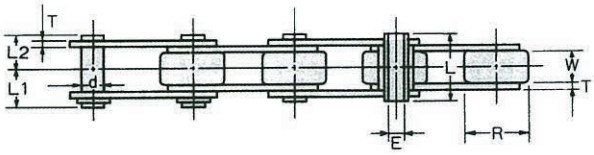

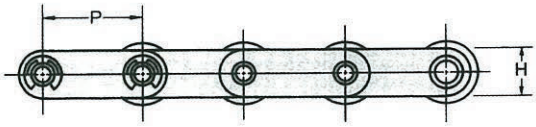

滚子型
TYPE ROLLER

单位UNIT：上方Upper：inch
下方Beneath：mm

OCM 链号 Chain No.	节距 Pitch P	滚子直径 Roller Diam. D	R	内节内宽 Width between L.P. W	销轴直径 Pin Diam. d	距排 Trans Pitch E (MIN)	销轴 Pin L	L1	L2	链板 Link Plate H	T	平均抗拉强度 Average Tensile Strength Lb/kgf	容许载荷 Allowable Load Lb/kgf	概略重量 Approx Weight Lb/ft	kg/m
C2040HP-C2042HP	1.000	0.312	0.625	0.313	0.222	0.157	0.63	0.362	0.315	0.472	0.059	2425	397	0.3	0.53
	25.4	7.92	15.88	7.95	5.65	4	16	9.2	8	12	1.5	1100	180	0.45	0.79
C2050HP-C2052HP	1.250	0.4	0.75	0.376	0.284	0.202	0.799	0.451	0.4	0.591	0.079	4409	705	0.5	0.8
	31.75	10.16	19.05	9.55	7.21	5.12	20.3	11.45	10.15	15	2	2000	320	0.74	1.19
C2060HP-C2062HP	1.500	0.469	0.875	0.5	0.327	0.236	1	0.559	0.5	0.677	0.094	6063	948	0.69	1.15
	38.1	11.91	22.23	12.7	8.3	6	25.4	14.2	12.7	17.2	2.4	2750	430	1.02	1.71
C2080HP-C2082HP	2.000	0.625	1.125	0.626	0.433	0.315	1.287	0.703	0.644	0.945	0.126	10803	1720	1.28	1.98
	50.8	15.88	28.58	15.9	11	8	32.7	17.85	16.35	24	3.2	4900	780	1.91	2.94

锯齿状附板
INDENTED ATTACHMENTS

锯齿状附板链条
Indented attachment chain.

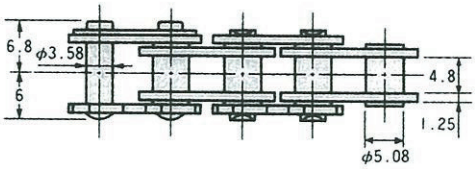

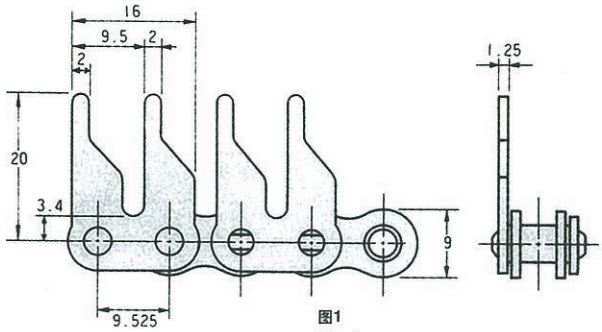

图1
Fig.1

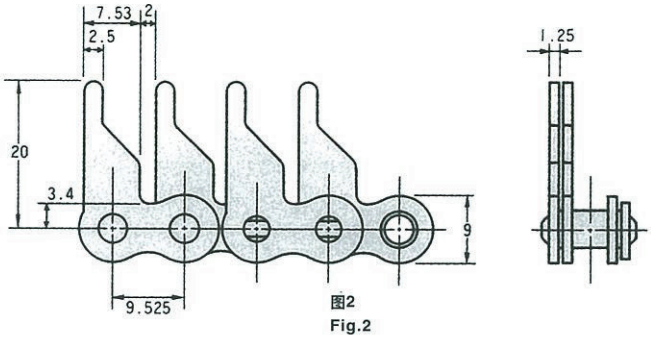

图2
Fig.2

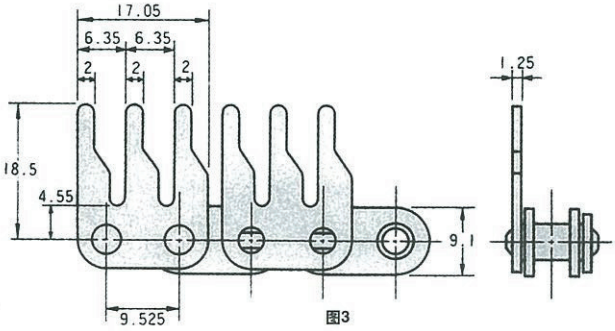

图3
Fig.3

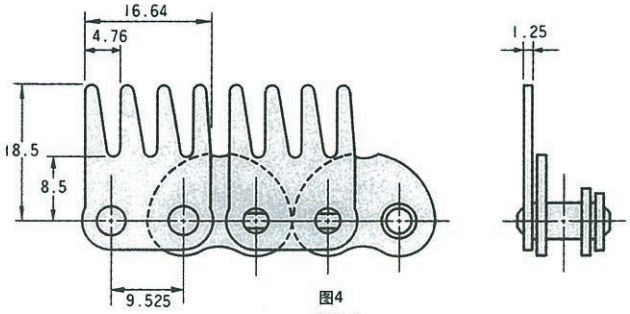

图4
Fig.4

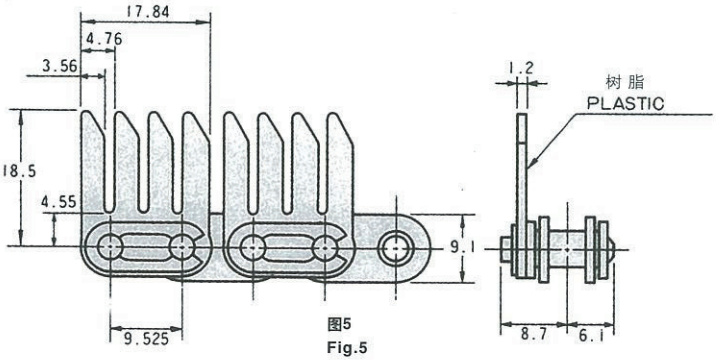

图5
Fig.5

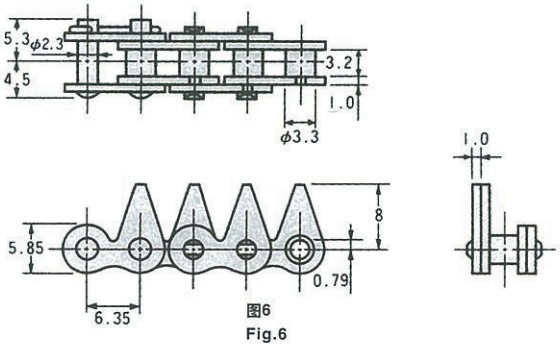

图6
Fig.6

倍速链条
BAI-SPEED CHAIN

滚子规格
Roller Specifications.

组合规则 Combination Code	VS-A	VS-B	VS-C	VS-D
特征 Features	标准型 容许强度大 Standard type Large allowable tension	标准型 高摩擦型 快速启动、低噪音 Standard type High friction type Quick start-up and less noise	电子导体 容许强度大 Electro conductive Large allowable tension	电子导体 高摩擦型 快速启动 Electro conductive High friction type Quick start-up

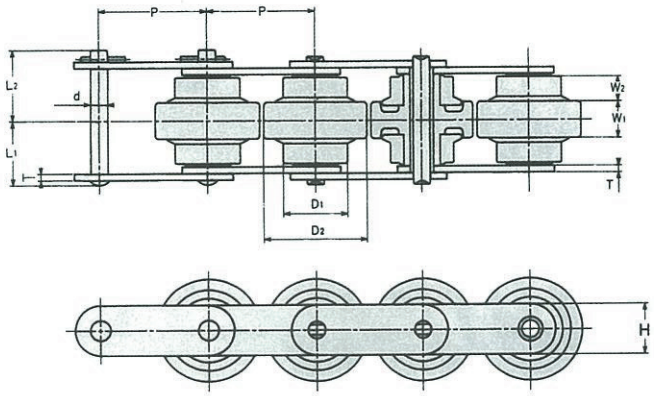

单位UNIT: mm

OCM 链号 Chain No.	节距 Pitch P	滚子直径 Roller Diam. D1	D2	滚子宽度 Roller Width W1	W2	链板 Plate H	T	销轴 Pin d	L1	L2		容许抗拉强度 Allowable Tension 滚子 A.C Roller A.C kgf	滚子 B.D Roller B.D kgf	概略重量 Approx Weight kg/m
C2040-VS	25.4	15.88	25.0	9.3	6.1	12.0	1.5	3.96	15.25	17.65	碳钢Carbon	90	45	1.0
											不锈钢Stainless	45	45	
C2050-VS	31.75	19.05	30.6	11.0	7.6	15.0	2.0	5.08	19.2	21.4	碳钢Carbon	140	70	1.3
											不锈钢Stainless	70	70	
C2060-VS	38.1	22.23	36.6	15.0	8.2	17.2	3.2	5.95	24.3	26.5	碳钢Carbon	210	105	2.3
											不锈钢Stainless	105	105	

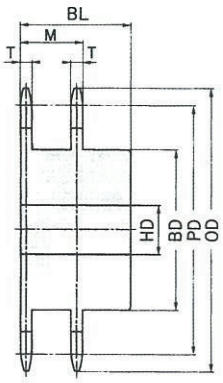

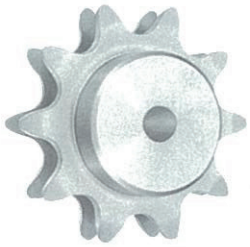

单位UNIT: mm

OCM 链号 Chain No.	类型 Type	链轮齿数 Number of teeth	PD	OD	链板 Link Plate T	HD	BD	BL	M	材料 Material	重量 Weight kg
C2040-VS	B	10	82.2	93	4	17	52	40	20.4	S43C	0.8
C2050-VS	B	10	102.75	117	5	20	66	45	25.5	S43C	1.5
C2060-VS	B	10	123.3	137	6	20	81	50	30.5	S43C	2.5

各种常规附板链条
APPLICATIONS FOR CUSTOM ATTACHMENT CHAIN

为满足客户需求，专门设计如下所示各种链条。OCM日常生产各种附板链条。如有疑问和需要报价，请与OCM联系。
The chains shown are examples specially designed to meet users' requierments. A wide variety of custom attachment chain is manufactured daily. Please contact OCM for any question and quotation.

托盘搬运用
Conveying pallets

设备搬运用
Conveying equipment

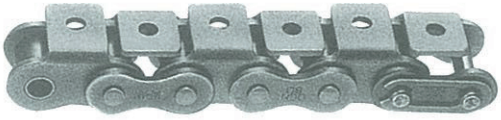

托盘搬运用
Conveying pallets

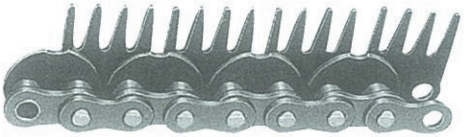

电阻器、焊条等搬运用
Conveying resistors, welding rods, etc.

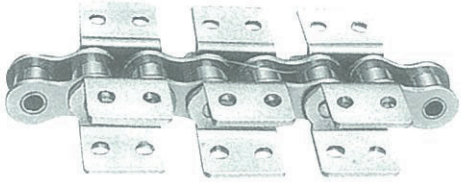

食品搬运用
Conveying foods

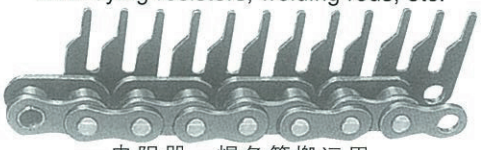

电阻器、焊条等搬运用
Conveying resistors, welding rods, etc.

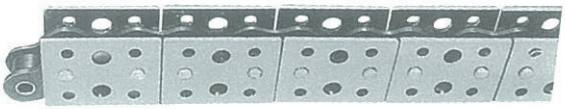

食品搬运用
Conveying foods

电阻器、焊条等搬运用
Conveying resistors, welding rods, etc.

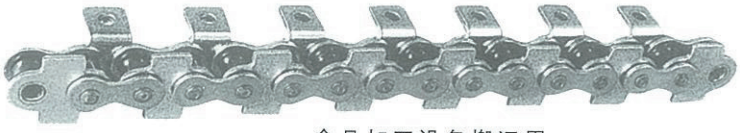

食品加工设备搬运用
Conveying for food machinery

卷闸门开、关用
For shutter opening and closing

面类搬运用
Conveying noodle

割捆机等农业机械用
Binder for agricultural machine

剪裁薄膜搬运用
Clipping chain for clipping film

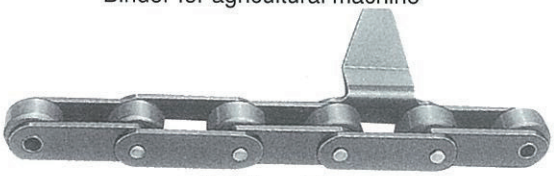

设备搬运用
Conveying equipment

剪裁薄膜搬运用
Clipping chain for clipping film

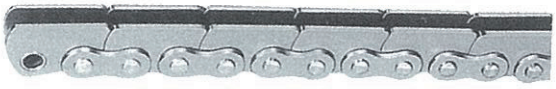

天窗开、关用
Skylight opening and closing

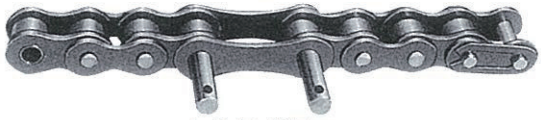

农业机械用
For agricultural machine

卷闸门开、关用
For shutter closing and opening

卷闸门开、关用
For shutter closing and opening

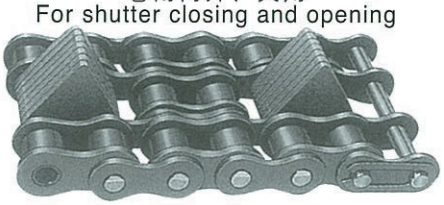

木材搬运用
For conveying logs

聚苯乙烯发泡板材搬运用
For conveying foamed styrol

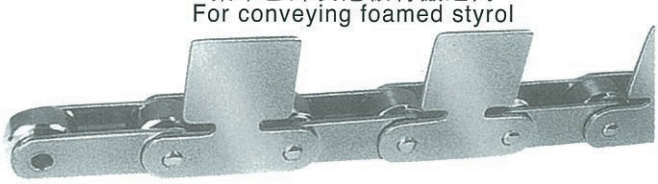

机械部件搬运用
Conveying machinery parts

托盘搬运用
For conveying pallets

水果搬运用
For conveying fruit

托盘搬运作业线用
For pallet conveying line

机械部件搬运用
Conveying machinery parts

托盘搬运用
For conveying pallets

医疗器械搬运用
For conveying medical instruments

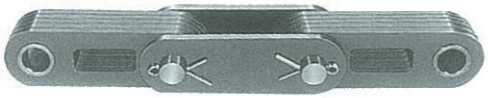

制造设备用
For construction machinery

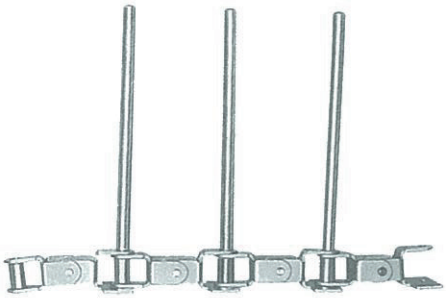

曲线搬运作业线用
For curved conveyance

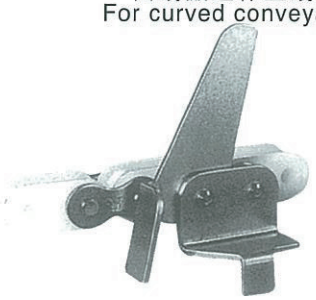

纸类搬运用
Paper conveyance

悬式输送机用
Trolley conveyor

鱼类输送用
Fish conveyance

鱼类输送用
Fish conveyance

链条的拆断与连接
CUTTING AND CONNECTING OF CHAIN

To cut and connect chain, chain anvil and punches with hammer are used.
拆断和连接链条时，使用链条砧座和带锤冲孔器。

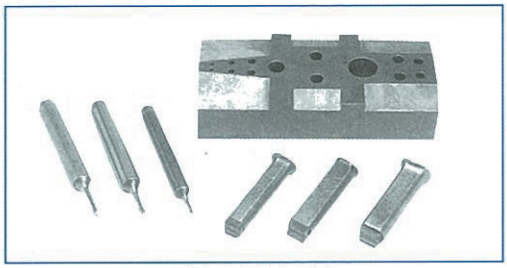

冲孔器和链条砧座
Punches and chain anvil

拆断
Cutting

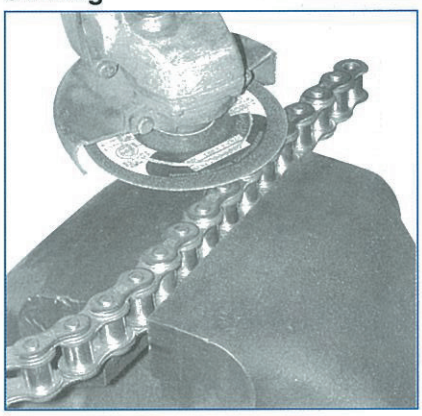

第一
对于铆头环接式链条，打磨掉两个销轴的端头。
No.1
As to rivet type chain, grind the end of two pins.

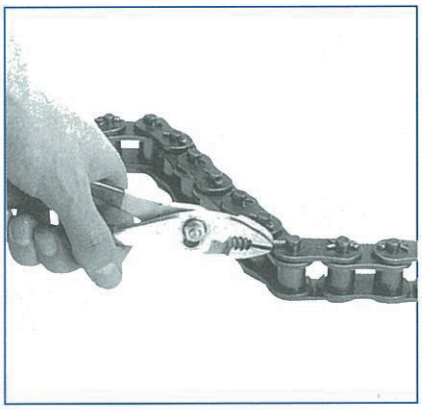

第二
对于开口销式链条，拔出开口销键。
No.2
As to cotter chain, pull cotter keys out.

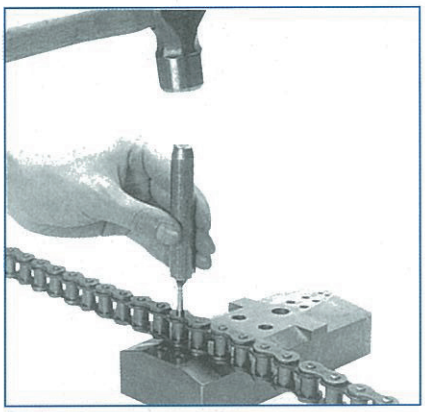

第三
将链条放置在链条砧座的合适孔位，将冲孔器放在两个销轴上，用锤子分别均匀地锤打、推出销轴。
No.3
Place the chain on suitable holes of the chain anvil. Put a punch on two pins and hammer them alternately and equally to push them out.

连接
Connecting

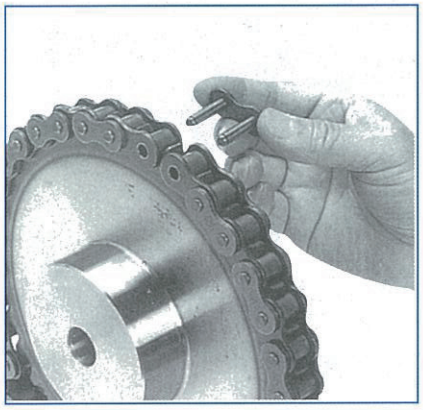

将链条缠绕在链轮上，将连接链节的两个销轴插入链条的套筒内。
Wind the chain on sprocket and put two pins of connecting link into bushes of the chain.

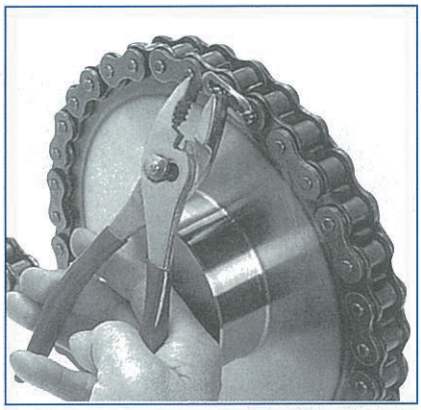

安装连接链节的链板，装入卡簧片或开口销固定链板。
Insert the plate of connecting link and put spring clip or cotter keys to hold it.

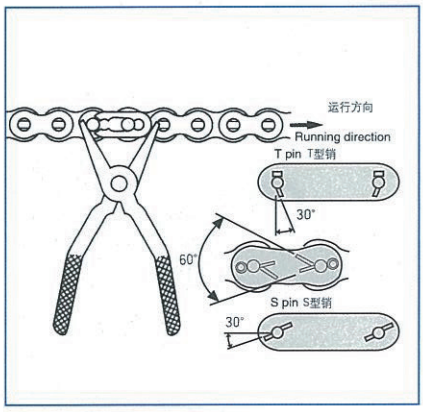

卡簧片的开口端安装在与链条运行方向相反的位置。
如上图所示，T型销弯曲到30度。开口销弯曲到60度，S型销弯曲到30度。
Spring clip should be inserted with its opening opposite the chain running direction.
T pin should be bent 30 degrees,Cotter keys 60 degrees and S pins 30 degrees as shown above.

OCM 输送链条
OCM CONVEYOR CHAIN

输送链条
CONVEYOR CHAIN

输送链条的制造
CONSTRUCTION OF CONVEYOR CHAIN

输送用链条种类很多，但钢制链条被广泛使用。OCM FM和FE型输送链条的强度、耐磨损性及其可根据使用情况随时更换材料和附板的特性均高于其他类型链条。

There are many types of chains for conveyor applications, but steel conveyor chains are popular and widely used. OCM FM and FE type conveyor chains are superior to other types in strength, wear-resistance and the characteristics that changes in material and attachment are readily made according to an application.

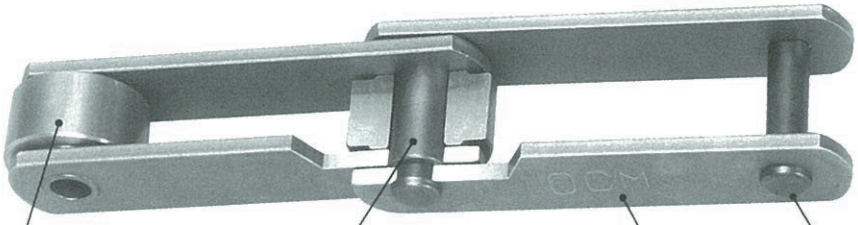

滚子形状与输送链条类型
CONVEYOR TYPE BY ROLLER

1. R 滚子

   滚子外径大于链板高度，此类输送链条主要用于翻板式、托盘式、刮板式输送机等。

   R Roller

   The outside diameter of roller is larger than the height of link plate. This type of conveyor is used mainly for slat, pallet, flight conveyors,etc.

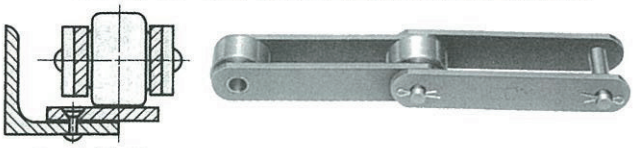

2. F 滚子

   凸缘滚子 此类输送链条广泛用于翻板式、倾斜桶式和盆状器皿式输送机。

   F Roller

   Flanged roller. This type is widely used on slat, inclined bucket and pan conveyors.

3. S 滚子

   滚子外径小于链板高度，此类输送链条用于筒式升降机和槽式循环链板输送机。

   S Roller

   The outside diameter of roller is smaller than the height of link plate. This is used for bucket elevator and flow conveyors.

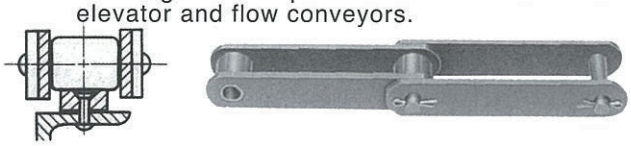

标准附板
STANDARD ATTACHMENT

根据要求安装附板。以下为标准的三种基本类型。

Attachments are attached according to requirements. The following three basic types are standard.

1. A型

   A-1指单孔型。A-2指双孔型

   Type A

   A-1 indicates one hole. A-2 two holes.

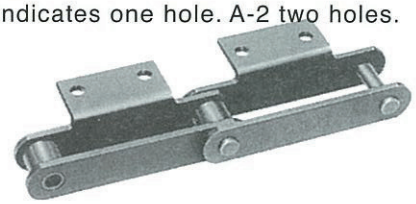

2. K型

   K-1指单孔型。K-2指双孔型。

   Type K

   K-1 indicates one hole. K-2 two holes.

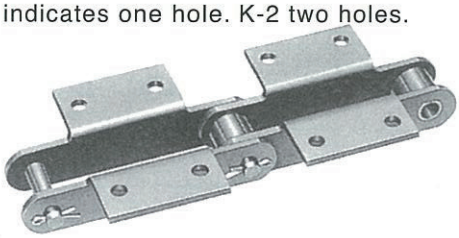

3. G型

   G-2指双孔型。G-4指四孔型。

   Type G

   G-2 indicates two holes. G-4 four holes.

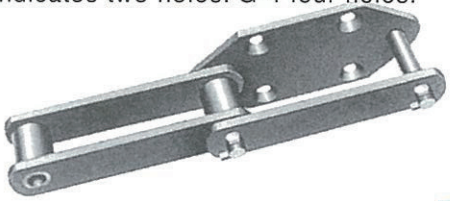

标准输送链条
STANDARD CONVEYOR CHAIN

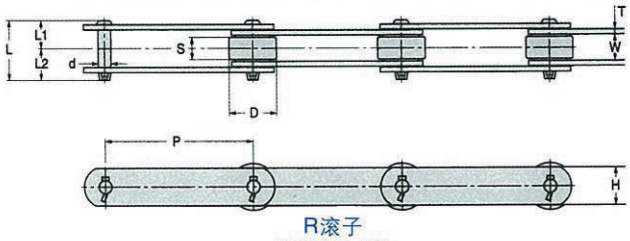

R滚子
R ROLLER

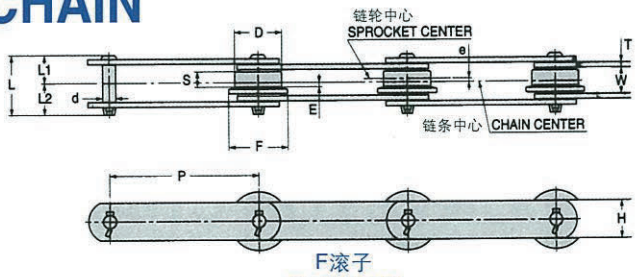

F滚子
F ROLLER

OCM 链号 Chain No.	滚子类型 Type of roller	平均抗断强度 Average Breaking Strength 标准FE FM Standard FE FM kN	kgf	重载 FMH.FEH Heavy Duty FMH.FEH kN	kgf	不锈钢 Stainless steel kN	kgf	节距 Pitch P	滚子尺寸 Roller Dimensions R D	R S	F D	F F	F S
FM.FMH 3075 FM.FMH 3100 FM.FMH 3125 FM.FMH 3150	R.F.S	29.41	3000	60.78	6200	29.41	3000	75 100 125 150	30 (31.8)	15.5	30 (31.8)	38 (42)	12
FM.FMH 5075 FM.FMH 5100 FM.FMH 5125 FM.FMH 5150	R.F.S	68.64	7000	138.24	14100	68.64	7000	75 100 125 150	40	19	40	50	14
FM.FMH 7100 FM.FMH 7125 FM.FMH 7150 FM.FMH 7175 FM.FMH 7200	R.F.S	84.31	8600	171.57	17500	73.55	7500	100 125 150 175 200	45	21.5	45	60	16
FM.FMH 10100 FM.FMH 10125 FM.FMH 10150 FM.FMH 10200	R.F.S.M	112.75	11500	225.49	23000	102.96	10500	100 125 150 200	50	26.5	50	65	20
FM.FMH 12200 FM.FMH 12250	R.F.S.M	186.32	19000	277.45	28300	132.38	13500	200 250	65	32	65	85	24
FM.FMH 17200 FM.FMH 17250 FM.FMH 17300	R.F.S.M	245.1	25000	392.16	40000	186.32	19000	200 250 300	80	45.8	80	105	34
FM.FMH 20200 FM.FMH 20250	R.F.S	205.88	21000	441.18	45000	-	-	200 250	75	40.5	75	100	30
FM.FMH 26250 FM.FMH 26300 FM.FMH 26450	R.F.S.M	279.41	28500	529.41	54000	-	-	250 300 450	100	50	100	130	38
FM.FMH 36250 FM.FMH 36300 FM.FMH 36450 FM.FMH 36600	R.F.S.M	475.49	48500	686.42	70000	-	-	250 300 450 600	125	56	125	160	42
FM.FMH 52450 FM.FMH 52600	R.F.S	539.22	55000	1078.43	110000	-	-	450 600	140	65	140	180	49
FE. FEH 3400	R.F.S	53.92	5500	98.04	10000	44.12	4500	101.6	38.1	18.7	38.1	50	13
FE.FEH 5400 FE.FEH 5600	R.F.S.M	83.33	8500	132.35	13500	68.64	7000	101.6 152.4	44.45 50.8	23.5 26.5	44.45 50.8	60 65	21.5 20
FE.FEH 9400	R.F.S.M	137.25	14000	274.57	28000	122.58	12500	101.6	44.45	27.5	44.45	60	19.5
FE.FEH 12600	R.F.S.M	186.32	19000	274.57	28000	132.38	13500	152.4	57.2	31.5	57.2	75	25
FE.FEH 17600	R.F.S.M	205.88	21000	392.16	40000	186.32	19000	152.4	69.9	31.5	69.9	90	23.5
FE.FEH 5261	S	83.33	8500	132.35	13500	68.64	7000	66.27	-	-	-	-	-
FE.FEH 7400	S	98.04	10000	166.71	17000	73.54	7500	101.6	-	-	-	-	-
FE.FEH 9307	S	117.65	12000	225.49	23000	102.96	10500	78.11	-	-	-	-	-

注：FM 3000的括弧中数值为FMS 3000的数值。• 括弧中的数值指重载型和不锈钢型。
Note:Figures parenthesized for FM3000 are for FMS3000. • Parenthesized indicate Heavy duty type and stainless steel.

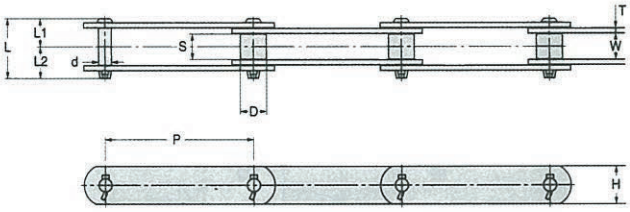

S(M) 滚子
S(M) ROLLER

单位UNIT: mm

e	E	S D	M D	内节内宽 Width between L.P. W	链板 Link Plate H	 T	销轴 Pin d	 L	 L1	 L2	重量 Weight(kg/m) R	 F	 S	 M
2 (1.8)	4 (4.3)	19.05 (15.9)	-	18 (16.1)	22	3.2	7.94	38 (36.4)	18 (17.1)	20 (19.3)	2.5 2.2 2 1.9	2.7 2.3 2.1 2	2 1.8 1.6 1.4	- - - -
2.5	4.5	22.2	-	22.2	32	4.5	11.11	51	24	27	5.6 5 4.5 4.1	5.8 5.2 4.7 4.3	5.4 4.8 4.3 3.9	- - - -
3	5	27	-	25	32	6	12.7	61.5	29	32.5	6.8 6.1 5.5 5 4.5	7.2 6.5 5.8 5.4 4.9	6 5.5 5 4.5 4	- - - - -
3.5	6.5	30	31.8	30	38	6.3 *(6.0)	14.29	68	32	36	10 8.7 7.5 6.5	10.2 8.9 7.7 6.7	9.4 8.1 6.9 5.9	9.8 8.5 7.2 6.2
4	8	34.93	38.1	36.5	45	7.9 *(8.0)	15.88	85.5	39.5	46	11.6 10.4	12.2 10.9	8.4 7.8	8.7 8
5	12	40.08	44.5	50.8	50.8	9.5 *(9.0)	19.05	110.5	51	59.5	19.7 17.2 15.8	20.7 18.2 16.6	12 11.1 10.5	13 12.2 11.5
5	10	40	-	45	50.8	9.5 *(9.0)	20.64	103	47.5	55.5	16.8 14.8	17.8 15.7	- -	- -
6	13	44.45	50.8	56.6	63.5	9.5 *(9.0)	22.23	116	54	62	26.2 23.4 18.7	27.8 24.7 19.6	14.7 13.8 12.4	16 15 14.5
7	14	50.8	57.2	66	76.2	12.7 *(12.0)	25.4	141	65.5	75.5	45.7 40.4 31.8 27.8	47.6 42 33.3 29	24 22.9 20.2 19	25 24 21 20
8	16.5	57.1	-	76	90	16	32	169	79	90	45.8 39.8	48 41.8	26.2 24.2	-
2.5	4	20.1	-	22.2	25.4	4.8 *(4.5)	9.53	51	24	27	4.3	4.7	3	-
2.3 3	8.5 7	22.2 25.8	25.4	27 30	28.6 38	6.3 6.3 *(6.0)	11.11 11.11	63 66	30 31.5	33 34.5	6.7 7.8	6.9 8.1	4.6 5	4.9
3.8	6	31.75	34.9	31	38	7.9 *(8.0)	15.88	78.5	37	41.5	10.4	10.7	8.7	9.1
3.5	9	34.93	38.1	36.5	45	7.9 *(8.0)	15.88	86	40	46	12.1	12.4	9.3	9.6
3.8	8	40.08	44.4	36.5	50.8	9.5 *(9.0)	19.05	94	43.5	50.5	17.1	17.6	12.6	13
-	-	22.2	-	27	28.6	6.3 *(6.0)	11.11	63	30	33	-	-	5.6	-
-	-	25	-	28.6	38	6.3 *(6.0)	12.7	66	31	35	-	-	6.5	-
-	-	31.75	-	36.5	38	7.9 *(8.0)	14.29	81.5	39	42.5	-	-	10.3	-

带附板输送链条
ATTACHMENT CONVEYOR CHAIN

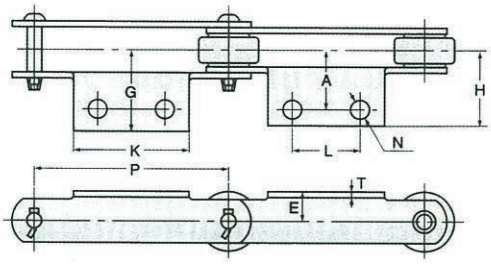

A-2型
TYPE A-2

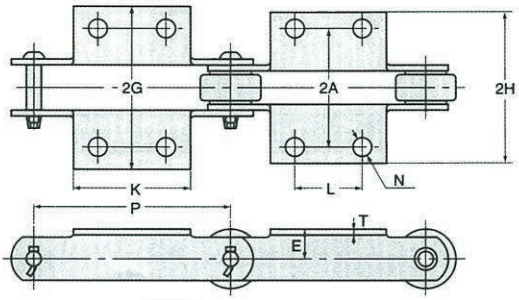

K-2型
TYPE K-2

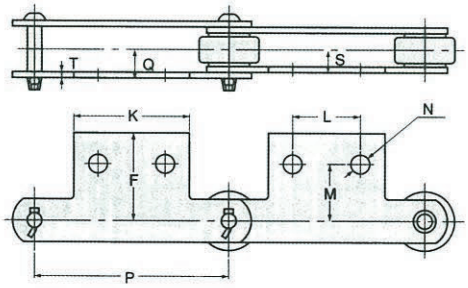

SA-2型
TYPE SA-2

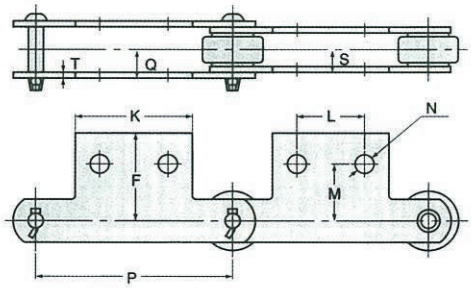

SK-2型
TYPE SK-2

单位UNIT: mm

OCM 链号 Chain No.	节距 Pitch P	链板 Link Plate T	A–2和K–2附板 A-2 and K-2 Attachment							SA–2和SK–2附板 SA-2 and SK-2				附板重量 Weight Attachment	
			K	N	L	A	E	G	H	M	F	S	Q	Kg A-2	Kg A-2
FM 3075-R.F.S	75		60(55)		35(30)									0.05	0.10
FM 3100-R.F.S	100		65		40		15							0.06	0.12
FM 3125-R.F.S	125	3.2	75	10	50	30	(20)	46	42.4	30	42	12.2	15.8	0.06	0.12
FM 3150-R.F.S	150		85		60									0.07	0.14
FM 5075-R.F.S	75		58		35									0.07	0.14
FM 5100-R.F.S	100		65		40									0.08	0.16
FM 5125-R.F.S	125	4.5	75	10	50	35	22	47	51.6	40	54	15.6	20.5	0.09	0.18
FM 5150-R.F.S	150		85		60									0.10	0.20
FM 7100-R.F.S	100		70		40									0.20	0.40
FM 7125-R.F.S	125		80		50									0.22	0.44
FM 7150-R.F.S	150	6.0	90	12	60	40	25	63	56.6	45	58	18.5	24.9	0.25	0.50
FM 7175-R.F.S	175		100		70									0.28	0.56
FM 10100-R.F.S.M	100		70		40									0.18	0.36
FM 10125-R.F.S.M	125		80		50									0.23	0.46
FM 10150-R.F.S.M	150	6.3	90	12	60	50	28	74	67.2	50	69	21.3	28.1	0.28	0.56
FM 10200-R.F.S.M	200		120		80									0.37	0.74
FM 12200-R.F.S.M	200		120		80									0.42	0.84
FM 12250-R.F.S.M	250	7.9	170	15	125	60	38	85	76.5	60	82.5	26.2	34.7	0.58	1.16
FM 17200-R.F.S.M	200		120		80									0.80	1.60
FM 17250-R.F.S.M	250	9.5	170	15	125	75	45	108	97.7	70	100.6	34.9	45.2	1.11	2.22
FM 26250-R.F.S.M	250	9.5	170	15	125	80	55	111.5	101.2	80	111.3	37.8	48.1	1.17	2.34
FE 3400-R.F.S	101.6	4.8	70	11	40	40	22	59	53.9	40	55.3	15.9	21	0.15	0.30
FE 5400-R.F.S.M	101.6	6.3	70	11	40	50	28	74	67.3		70.7	19.8	26.5	0.20	0.40
FE 5600-R.F.S.M	152.4	6.3	90	11	60	50	32	72	65.2	50	71	21.3	28.1	0.25	0.50
FE 9400-R.F.S.M	101.6	7.9	80	15	40	55	35	84	75.6	60	81	23.4	31.8	0.30	0.60
FE 12600-R.F.S.M	152.4	7.9	100	15	60	60	38	85	76.5	60	82.5	26.2	34.7	0.40	0.80
FE 17600-R.F.S.M	152.4	9.5	100	15	60	65	45	94.5	84.3	70	94.6	27.8	38	0.55	1.10

注： 1）链号5000和5000以下的以开口销式为标准，也有铆头环接式。链号7000和7000以上的以开口销式为标准。
2）FM3000和FMS3000采用开口销式。其他规格的链条采用T型销式。
3）FM3000的括号内尺寸为FMS3000的尺寸。

Note: 1) Cotter types are standard for Chain Nos.5000 and below but rivet types are available.Cotter types are standard for Chain Nos.7000 and above.
2) Cotter keys used for cotter construction of FM3000 and FMS3000.T pins are used for other chain sizes.
3) Dimensions parenthesized of FM3000 is for FMS3000.

带附板输送链条
ATTACHMENT CONVEYOR CHAIN

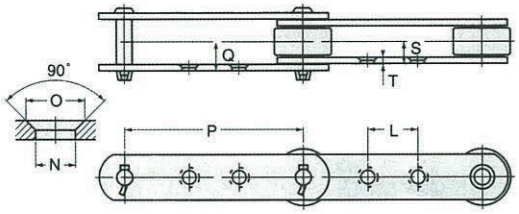

G-2型
TYPE G-2

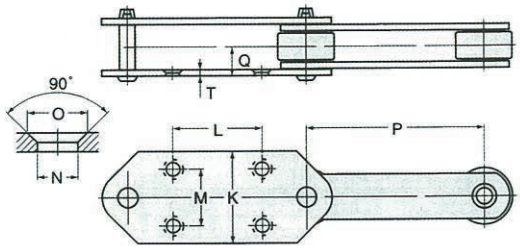

G-4型
TYPE G-4

G-2型
TYPE G-2

单位UNIT: mm

OCM 链号 Chain No.	节距 Pitch P	链板 Link Plate T	G-2型尺寸 Dimensions of Type G-2					安装螺栓的限定高度 Limited height of installing bolts		采用螺栓直径 Diameter of bolts used
			N	O	L	Q	S	外链节 Outside link	内链节 inside link	
FM 3075-R.S	75				30					
FM 3100-R.F.S	100	3.2	8	13	40	15.8	12.2	27	20	M6
FM 5100-R.S.	100				40					
FM 5150-R.F.S.	150	4.5	9.5	17	60	20.5	15.6	35	25	M8
FM 10100-S	100				30					
FM 10150-R.F.S.M	150	6.3	11	22	60	28.1	21.3	49	35	M10
FM 12200-R.F.S.M	200				80					
FM 12250-R.F.S.M	250	7.9	15	27	125	34.7	26.2	63	45	M12
FM 17200-R.F.S.M	200				80					
FM 17250-R.F.S.M	250	9.5	15	27	110	45.2	34.9	80	60	M12
FM 17300-R.F.S.M	300				150					
FM 26300-R.F.S.M	300				140					
FM 26450-R.F.S.M	450	9.5	15	27	220	48.1	37.8	86	64	M12
FM 36450-R.F.S.M	450				220					
FM 36600-R.F.S.M	600	12.7	19	32	300	59.2	45.7	105	78	M16
FM 52450-R.F.S	450				220					
FM 52600-R.F.S	600	16	22	38	300	71	54	124	89	M18
FE 5600-R.F.S	152.4	6.3	11	22	60	28.1	21.3	48	34	M10
FE 12600-R.F.S	152.4	7.9	15	27	50	34.7	26.2	62	44	M12

注： 1）链号5000和5000以下的以开口销式为标准，也有铆头环接式。
2）链号7000和7000以上的以开口销式为标准。
3）FM3000和FMS3000采用开口销式。其他规格的链条采用T型销式。

Note: 1) Cotter type is standard for Chain Nos.5000 and below, but rivet type is available.
2) Cotter type is standard for Chain Nos.7000 and above.
3) Cotter key is for FM3000 and FMS3000 and T pins for other chain sizes.

G-4型
TYPE G-4

单位UNIT: mm

OCM 链号 Chain No.	节距 Pitch P	链板 Link Plate T	G-4型尺寸 Dimensions of Type G-4						每块链板重量 Weight per pc. kg	每两链节链板略重 Approx weight of att every 2nd (kg/m)			
			N	O	L	M	K	Q		R型 R type	F型 F type	S型 S type	B型 B type
FM 5150-R.F.S	150	4.5	9.5	17	75	70	100	20.5	0.43	5.5	5.7	5.3	4.4
FM 10150-R.F.S.M	150	6.3	11	22	75	70	110	28.1	0.61	9.5	9.7	8.9	7.7
FM 12200-R.F.S.M	200				100	80	130		0.97	14	14.6	10.8	-
FM 12250-R.F.S.M	250	7.9	15	27	140	100	150	34.7	1.45	13.3	13.8	10.7	-
FM 17200-R.F.S.M	200				100	80	130		1.12	22.5	23.5	14.8	-
FM 17250-R.F.S.M	250	9.5	15	27	140	100	150	45.2	1.69	20.6	21.6	14.5	-
FM 17300-R.F.S.M	300				180	120	170		2.39	19.8	20.6	14.5	-
FM 26300-R.F.S.M	300				180	120	170		2.24	27.1	28.4	17.5	-
FM 26450-R.F.S.M	450	9.5	15	27	250	140	190	48.1	3.98	23.1	24	16.8	-
FM 36250-S	250				140	100	150		1.98	-	-	27.9	-
FM 36300-S	300	12.7	15	27	180	100	150	59.2	2.38	-	-	26.8	-
FE 5600-R.F.S.M	152.4	6.3	11	22	75	70	110	28.1	0.50	9.4	9.7	7.6	-
FE 12600-R.F.S.M	152.4	7.9	15	27	75	70	120	34.7	0.53	13.8	14.1	11	-

注： 1）链号5000和5000以下的以开口销式为标准，也有铆头环接式。
2）链号7000和7000以上的以开口销式为标准。
3）开口销式以T型为标准。

Note: 1) Cotter type is standard for Chain Nos.5000 and below, but rivet type is available.
2) Cotter type is standard for Chain Nos.7000 and above.
3) T pin is standard for cotter type.

槽式循环链板输送链条
FLOW CONVEYOR CHAIN

该链条采用封闭槽输送粉状物品和粮食，是防止环境污染的理想链条。

The chains are ideal for preventing enviromental pollution because they convey powdered material and grain in sealed case.

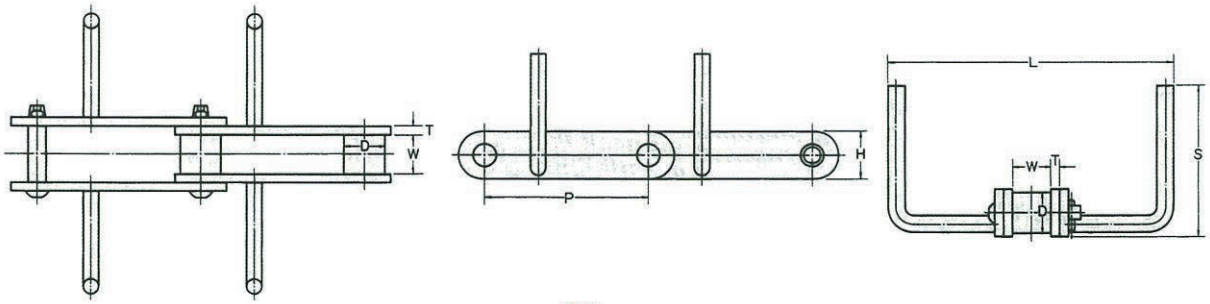

B型
TYPE B

B型
TYPE B

单位UNIT: mm

OCM 链号 Chain No.	节距 Pitch P	滚子直径 Roller Diam. D	内节内宽 Width between L.P. W	链板 Link Plate H	链板 Link Plate T	附板 Attachment 宽度 Width L	附板 Attachment 高度 Height S	平均抗断载荷 Average Breaking load kN	平均抗断载荷 Average Breaking load kgf	概略重量 Approx weight kg/m
FE 5400-M-B	101.6	25.4	27	28.6	6.3	135	55	83.33	8500	5.4
FE 9400-M-B	101.6	34.9	31	38	7.9	135	55	137.25	14000	9.8
FE 12600-M-B1	152.4	38.1	36.5	45	7.9	185	80	186.27	19000	13
FE 12600-M-B2						250	100			14.5
FE 12600-M-B3						330	125			16.3

注： 1）该链条采用标准输送机部件。
2）有重载、耐磨耐热性高的输送链条。
3）根据订单制作该链条。

Note: 1) Flow conveyor chain using standard conveyor components.
2) Heavy duty, high wear resistance and heat resistant conveyor are available.
3) Flow conveyor is made to order.

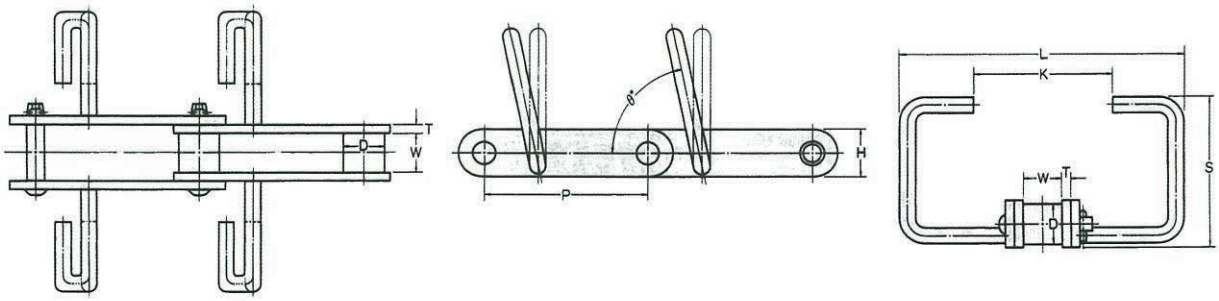

U型
TYPE U

U型
TYPE U

单位UNIT: mm

OCM 链号 Chain No.	节距 Pitch P	滚子直径 Roller Diam. D	内节内宽 Width between L.P. W	链板 Link Plate H	链板 Link Plate T	附板 Attachment 宽度 Width L	附板 Attachment 高度 Height S	附板 Attachment K	附板 Attachment θ°	平均抗断载荷 Average Breaking load kN	平均抗断载荷 Average Breaking load kgf	概略重量 Approx weight kg/m
FE 5400-M-U	101.6	25.4	27	28.6	6.3	145	110	50	90	83.33	8500	6.1
FE 9400-M-U	101.6	34.9	31	38	7.9	145	110	50	70	137.25	14000	11.1
FE 12600-M-U1	152.4	38.1	36.5	45	7.9	225	140	100	90	186.27	19000	17.1
FE 12600-M-U2						225	140	65	70			17.3
FE 12600-M-U3						225	140	100	70			17.1
FE 12600-M-U4						300	175	65	70			20.2

注： 1）该链条采用标准输送机部件。
2）有重载、耐磨耐热性高的输送链条。
3）根据订单制作该链条。

Note: 1) Flow conveyor chain using standard conveyor components.
2) Heavy duty, high wear resistance and heat resistant conveyor are available.
3) Flow conveyor is made to order.

槽式循环链板输送链条
FLOW CONVEYOR CHAIN

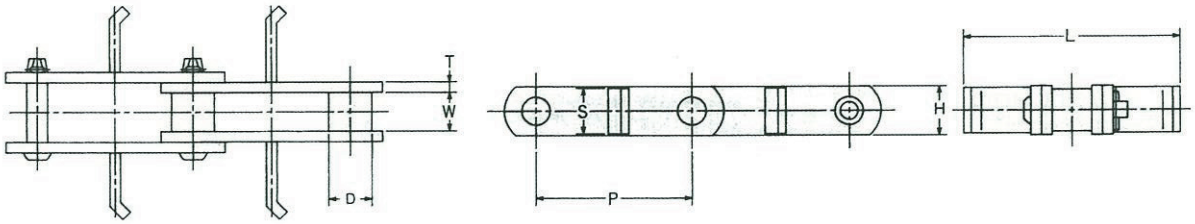

K型
TYPE K

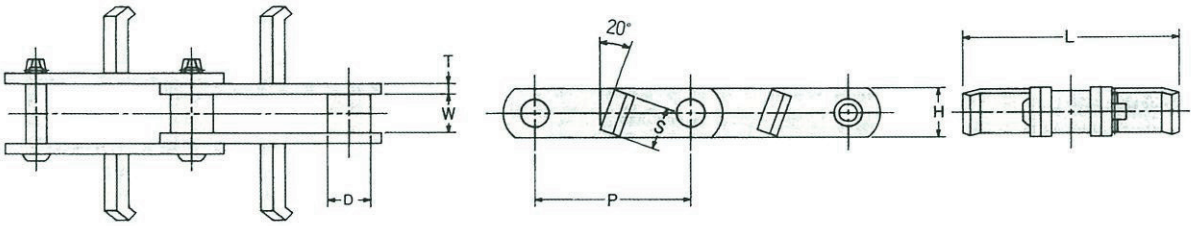

KL型
TYPE KL

K,KL型
TYPE K,KL

单位UNIT: mm

OCM 链号 Chain No.	节距 Pitch P	滚子直径 Roller Diam. D	内节内宽 Width between L.P. W	链板 Link Plate H	链板 Link Plate T	附板 Attachment 宽度 Width L	附板 Attachment 高度 Height S	平均抗断载荷 Average Breaking load kN	平均抗断载荷 Average Breaking load kgf	概略重量 Approx weight kg/m
FE 5400-M	101.6	25.4	27	28.6	6.3	135	28	83.33	8500	6.5
FE 9400-M	101.6	34.9	31	38	7.9	185	34	137.25	14000	10.5
FE 12600-M	152.4	38.1	36.5	45	7.9	250	40	186.27	19000	12

注： 1) 该链条采用标准输送机部件。
2) 有重载、耐磨耐热性高的输送链条。
3) 根据订单制作该链条。

Note: 1) Flow conveyor chain using standard conveyor chain components.
2) Heavy duty, high wear resistance and heat resistance conveyor are available.
3) Flow conveyor chain is made to order.

高链板输送链条
DEEP LINK PLATE CONVEYOR CHAIN

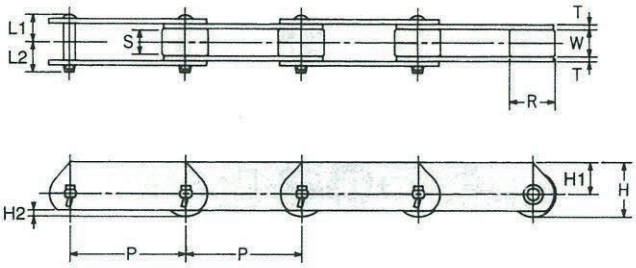

单位UNIT: mm

OCM 链号 Chain No.	节距 Pitch			内节内宽 Width between L.P.	链板 Link Plate				销轴 Pin		重量 Weight	容许滚子载荷 Allowable roller load				平均抗断载荷 Average Breaking load			
												标准 Standard		重载 Heavy Duty		标准 Standard		重载 Heavy Duty	
	P	R	S	W	H	H1	H2	T	L1	L2	kg/m	kN/pc	kg/pc	kN/pc	kg/pc	kN	kgf	kN	kgf
FMD 3075R	75										3.2								
FMD 3100R	100	30	15.5	18	36	21	4	3.2	18	20	2.8	0.59	60	0.88	90	29.41	3000	60.78	6200
FMD 5100R	100										5.9								
FMD 5150R	150	40	19	22.2	44	24	4	4.5	24	27	4.9	0.93	95	1.47	150	68.63	7000	138.24	14100
FMD 10150R	150										9.7								
FMD 10200R	200	50	26.5	30	57	32	6.4	6.3	32	36	8.5	1.57	160	2.6	265	112.75	11500	225.49	23000
FED 12600R	152.4	57.2	31.5	36.5	63.6	35	6.1	7.9	40	46	14	2.11	215	3.53	360	186.27	19000	277.45	28000
FMD 12200R	200										14.9								
FMD 12250R	250	65	32	36.5	73.5	41	10	7.9	39.5	46	13.5	2.45	250	4.12	420	186.27	19000	277.45	28000
FMD 17250R	250										22.5								
FMD 17300R	300	80	45.8	50.8	90	50	13.8	9.5	51	59.5	21.5	4.31	440	7.16	730	245.1	25000	392.16	40000

侧轮输送链条
OUTBOARD CONVEYOR CHAIN

基础链条为FM型带凸缘侧轮的S滚子输送链条。
如需订货，请确定侧轮的间距。
Base chain is FM type S roller conveyor chain with flange outboard roller.
When ordering, please specify the spacing of outboard roller.

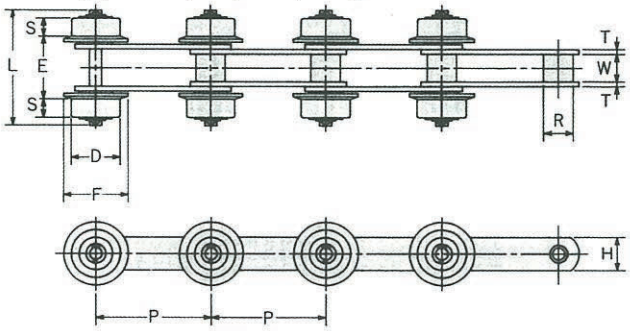

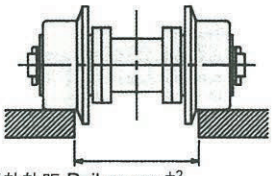

导轨轨距 Rail gauge $^{+2}_{0}$

单位UNIT: mm

OCM 链号 Chain No.	节距 Pitch		内节内宽 Width between L.P.	链板 Link Plate		侧轮 Outboard Roller			销轴 Pin		导轨轨距 Rail gauge	见下文 *See below	容许侧轮(两侧) Allowable outboard roller(both sides)			
													未热处理 Not Heat treated		热处理 Heat treated	
	P	R	W	H	T	D	F	S	L	E		kg	kN	kgf	kN	kgf
FM 3075-S-SR	75															
FM 3100-S-SR	100	19.05	18	22	3.2	31.8	42	12	74	38	40	0.3	0.69	70	1.08	110
FM 5075-S-SR	75															
FM 5100-S-SR	100	22.2	22.2	32	4.5	40	50	14	102	55	57	0.5	1.18	120	1.86	190
FM 5150-S-SR	150															
FM10100-S-SR	100															
FM10150-S-SR	150	30	30	38	6.3	50	65	20	135.6	73	75	1	1.86	190	3.13	320
FM12200-S-SR	200															
FM12250-S-SR	250	34.93	36.5	45	7.9	65	85	24	165	92.5	94.5	1.8	2.94	300	4.8	490
FM17200-S-SR	200															
FM17250-S-SR	250	40.1	50.8	50.8	9.5	65	85	24	186	111.4	113.4	3.8	3.04	310	5.1	520
FM17300-S-SR	300															

注：*指 每对侧轮的附加重量。Note:*Additional weight of one pair of outboard rollers.

裙板式输送链条
APRON CONVEYOR CHAIN

OCM裙板式输送链条是输送如加工机床的切屑类散货物品的理想输送链条。
This OCM apron conveyor is ideal for conveying bulk material such as chips made by machine tools.

主要特征

1）非常适宜少量散货的输送。
每个裙板用铰链紧密连接。
甚至可输送沙状细小颗粒物品。
2）侧部链条为OCM的标准输送链条，可使用OCM标准链轮。
3）根据运行环境可改变技术条件。
（1）用隔板将裙板隔开，输送的不同物品不能混合。
（2）倾斜度大的输送机配有挡板。挡板可随意安装在任何节距。
（3）对于冻干部件或物品，有小孔裙板。
（4）有不锈钢裙板。

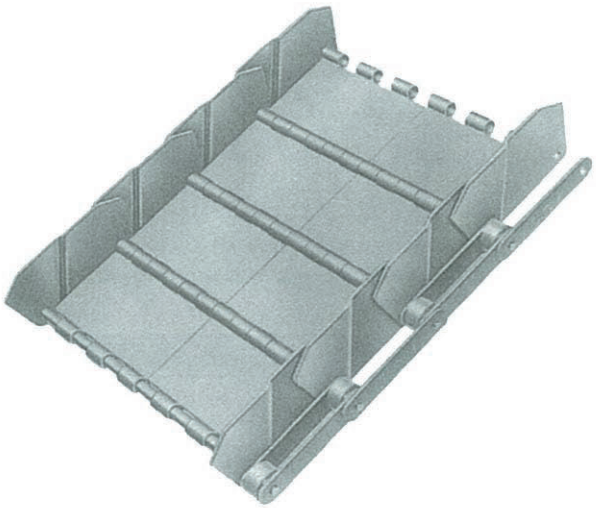

Main features

1) Excellent for conveying small bulk material.
Each apron plate is closely connected by hinges.
Even tiny particle such as sand are easily conveyed.
2) Side chains are OCM standard conveyor chain.
OCM standard sprocket can be used.
3) Specifications can be changed according to applications.
(1) Aprons are partitioned with plates, and different materials without mixing can be conveyed.
(2) For sharp inclined conveyor, stop plates are available.
The stop plate can be installed at any desired pitch.
(3) For drying and freezing parts or material, small holed aprons are available.
(4) Stainless apron is available.

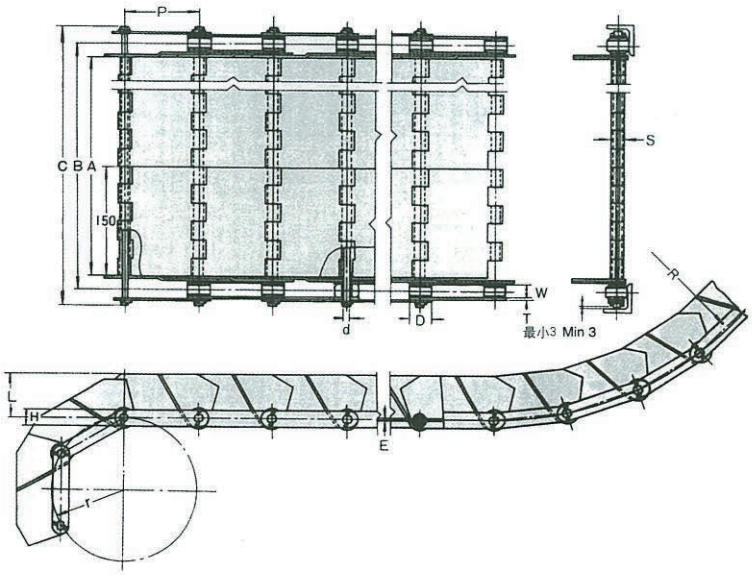

单位UNIT: mm

OCM 链号 Chain No.	A	B	C	L	E	S	侧部链条 Side Chain: OCM 链号 Chain No.	节距 Pitch P	滚子直径 Roller Diam. D	内节内宽 Width between L.P. W	链板 Link Plate H	链板 Link Plate T	销轴直径 Pin Diam. d	最小上弯半径 Min. Upturn Radius R	最小下弯半径 Min. Downturn Radius r	平均重量 Average Weight kg/m	容许载荷 Allowable Load (kgf)
EC3075-150	150	188.4	227.3	40	2.0	16.4	FM3075-R	75	30	18	22	3.2	7.94	300	75	13.0	900
EC3075-300	300	338.4	377.3													17.5	
EC3075-450	450	488.4	527.3													22.4	
EC3100-150	150	188.4	227.3	60	2.0	16.4	FM3100-R	100	30	18	22	3.2	7.94	450	100	12.7	900
EC3100-300	300	338.4	377.3													16.9	
EC3100-450	450	488.4	527.3													21.1	
EC5150-150	150	200.4	252.7	80	3.2	26.0	FM5150-R	150	40	22.2	32	4.5	11.11	900	150	18.8	2000
EC5150-300	300	350.4	402.7													25.7	
EC5150-450	450	500.4	552.7													32.2	
EC5150-600	600	650.4	702.7													39.9	
EC5150-750	750	800.4	852.7													46.3	

1. 如果要求A尺寸大于上述尺寸，请与OCM联系。
注：尺寸会有变化。根据要求提供合格尺寸。
1.When you require A dimension wider than the above, please contact us.
Note:Dimensions subject to change. Certified dimensions furnished upon request.

裙板式输送链条
APRON CONVEYOR CHAIN

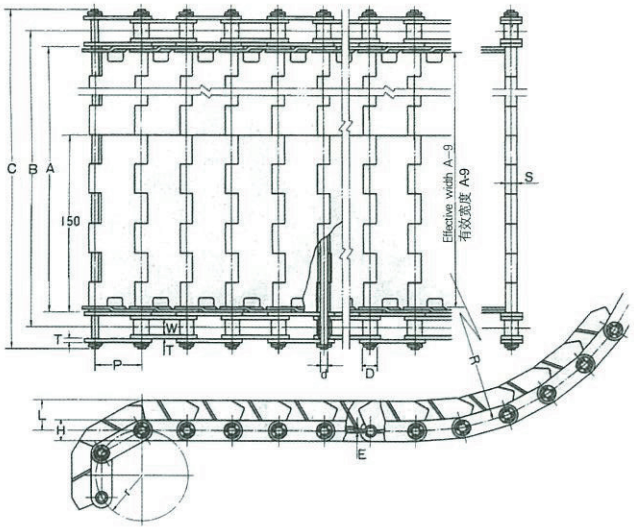

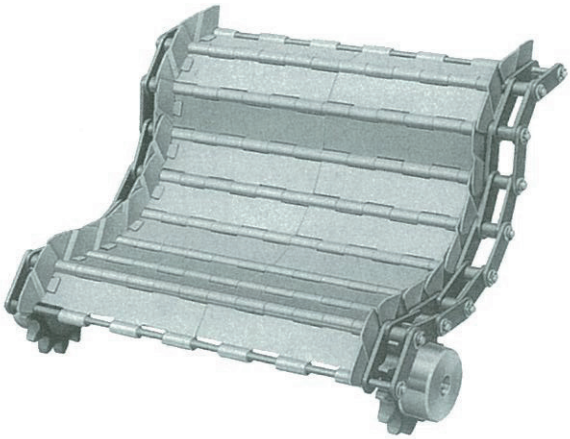

单位UNIT: mm

OCM 链号 Chain No.	A	B	C	L高度/厚度 L height/thickness	铰链厚度 Hinge thickness E	S	侧部链条 Side Chain: OCM 链号 Chain No.	节距 Pitch P	滚子直径 Roller Diam. D	内节内宽 Width between L.P. W	链板 Link Plate H	链板 Link Plate T	销轴直径 Pin Diam. d	最小上弯半径 Min. Upturn Radius R	最小下弯半径 Min. Downturn Radius r	容许载荷 Allowable Load kN	容许载荷 Allowable Load kgf	重量 Weight kg/m
EC2060H-150	150	176.4	214.2															8.0
EC2060H-300	300	326.4	364.2	25/2.0	2	10.4	C2060H	38.1	*11.91	12.7	17.2	3.2	5.95	200	38.1	8.82	900	13.8

注： 1) *有直径22.23的滚子。
2) 有宽度大于150和300的。
3) 也有EC2080H链条。

Note: 1) *22.23 diameter is available.
2) A dimension wider than 150 and 300 is available.
3) EC2080H is also available.

曲线式(侧弯)输送链条
CURVE (SIDEBOW) CONVEYOR CHAIN

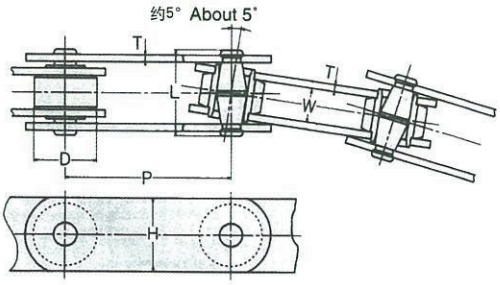

C-L型
TYPE CL

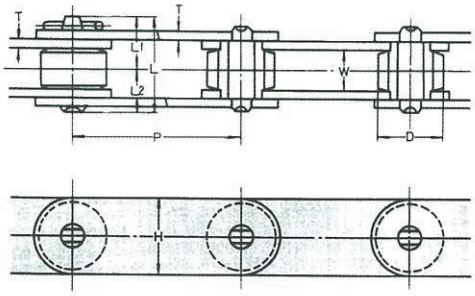

SL型
TYPE SL

单位UNIT: mm

OCM 链号 Chain No.	节距 Pitch p	滚子直径 Roller Diam. D	内节内宽 Width between L.P. W	链板 Link Plate H	链板 Link Plate T	销轴 Pin L	销轴 Pin L1	销轴 Pin L2	侧弯半径 Sideflex Radius 最小 Min	侧弯半径 Sideflex Radius 常用 Ordinary use	平均抗断载荷 Average breaking load KN	平均抗断载荷 Average breaking load kgf	容许载荷 Allowable load kN	容许载荷 Allowable load kgf	重量 Weight kg/m
CL 80	80	38	21	45	4.5	52	-	-	650	800	49.02	5000	6.68	700	5.8
CL 100	100	38	21	45	4.5	52	-	-	750	900	49.02	5000	6.68	700	6.5
SL 100	100	38	21	45	4.5	50	27	23	-	-	68.63	7000	9.80	1000	6.0

OCM
东方链条工业株式会社
ORIENTAL CHAIN MFG.CO., LTD.

东方链条工业株式会社
ORIENTAL CHAIN MFG.CO., LTD.

日本石川県白山市宫永市町 485番地
485 Miyanagaichi-machi,Hakusan-shi,Ishikawa-ken,Japan.
TEL:+81-76-276-1156 Fax : +81-76-274-9030
Phone : +81-76-276-1156 Fax : +81-76-274-9030
E-mail : ocm @ ocm.co.jp

http://www.ocm.co.jp/english.html

ISO 9001
Cert JQA 1248

CERTIFIED JQA MANAGEMENT SYSTEM QUALITY SYSTEM
日本质量保证机构
JAPAN QUALITY ASSURANCE ORGANIZATION

CERTIFIED IQNet MANAGEMENT SYSTEM
国际认证网
THE INTERNATIONAL CERTIFICATION NETWORK

本产品样本所述技术条件若有变化恕不另行通知。
根据要求提供合格规格。
The Specifications described in this catalog are subject to change without notice.
Certified specifications will be furnished upon request.

0711 OCM